Instruction Manual

# MICROJECT RECORDER (PHA/PHC) TROUBLESHOOTING GUIDE

Fuji Electric Systems Co., Ltd.

TN510410-E

# CONTENTS

## II. Maintenance Information

# I. Troubleshooting Guide and Countermeasure

# 1. The recorder is inoperative

The recorder does not start with the power turned ON. Since the display unit is unusual, no setting can be carried out. If something unusual which may affect the recorder's functions occurs, the troubleshooting guide below will help you in solving problems.

## 1.1 Nothing is displayed when the power supply switch is turned on.

| Check | Probable Causes | Suggested Remedy | Reference Page |
|---|---|---|---|
| Check the input voltage to AC terminal.<br>PHA: 85 to 300V AC<br>PHC: 85 to 150 V AC or 150 to 300 V AC<br>The PHC power must conform to the specifications, or the power supply may be damaged.<br>1) Check the power spec. against the specifications on the nameplate.<br>2) Since the PHC uses a selection power switch on the rear panel, check the switch position. | Power supply is not properly connected. | Connect the power according to the specifications. | II. 7. Selection of PHC power switch. |
| Check the connected terminals of the power.<br> 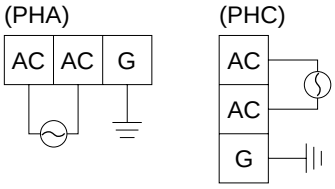 <br> | Terminals are not properly connected. | Connect properly. | |
| Check fuses for burnout (only PHA). (Since the PHC fuses are contained within the power unit, they are impossible to check.) | Burn out. | Replace. (250V AC, 1A) | |
| Pull the main unit from the case and check the 5V power supply on:<br>PHA: Main board CN6 or CN7<br>PHC: AI board CN5<br>5V power supply is not outputted: the power unit is faulty or card is damaged.<br><br>5V power supply is normally outputted: the main unit is faulty. | The power unit is faulty.<br><br>Card is defective.<br><br>Main unit is defective. | Replace.<br><br>PHA: Replace the main board.<br>PHC: Replace the AI board.<br>PHA: Replace the relay board or display unit.<br>PHC: Replace the CPU board or display unit. | |

### 1.2 Nothing is displayed when the power is turned on, and only the carriage motor is energized.

| Check | Probable Causes | Suggested Remedy | Reference Page |
|---|---|---|---|
| If the system can start recording by pressing the RECORD key, the power may not be supplied to a fluorescent character display. | Fluorescent character display is not wired yet.<br><br>Fluorescent character display is defective. | Connect properly.<br><br>Replace display unit. | |

### 1.3 Only underline is displayed when the power is turned on.

| Check | Probable Causes | Suggested Remedy | Reference Page |
|---|---|---|---|
| The power is supplied but the control signal is not supplied to the fluorescent character display. | Fluorescent display cable is disconnected.<br><br>Card is damaged. | Check cable. If cable is disconnected, replace the whole display unit.<br>PHA: replace the main board.<br>PHC: replace the CPU unit. | |

### 1.4 Display is abnormal when the power is turned on.

| Check | Probable Causes | Suggested Remedy | Reference Page |
|---|---|---|---|
| Control signal to the fluorescent display is abnormal. Such errors may occur due to faulty CPU or RAM error data or even when the battery is removed.<br>1) Check that the battery is fit in position. | The battery is not properly installed. | Reinstall the battery and start again. | II. 4. The method of initial start |
| 2) Check the battery voltage. (2.5V or more) | Battery voltage drop. | Replace the battery (TK7C9980P1) and make an initial start. | See the Manual, Chap. 8. |
| 3) Make an initial start.<br>4) If the above remedy cannot correct the error, a card is probably damaged. | The card is damaged. | PHA: Replace the main board.<br>PHC: Replace the CPU board. | |

### 1.5 Japanese characters are displayed in the English mode. English characters are displayed in the Japanese mode.

| Check | Probable Causes | Suggested Remedy | Reference Page |
|---|---|---|---|
| Selection of English/Japanese is made by internal parameter settings.<br><br>1) After the setting has been changed, make an initial start.<br>2) If not corrected by the remedy, the card is probably defective. | The internal parameter setting is wrong.<br><br>The card is damaged. | Set properly and make an initial start.<br><br>PHA: Replace the main board.<br>PHC: Replace the CPU board. | II. 6. Internal data setting method<br><br>II. 4. The method of initial start |

### 1.6 Display is dim.

| Check | Probable Causes | Suggested Remedy | Reference Page |
|---|---|---|---|
| 1) Turn off the power once and turn it on again.<br>2) Check if the keys can be manipulated by pressing the SELECT key.<br>In the case where key action is possible but part of the display is dim, the fluorescent display unit is defective.<br>Where key action is impossible, the card may be damaged. | Fluorescent display tube is defective.<br><br>Card is damaged. | Replace the display unit.<br><br>PHA: Replace the main board.<br>PHC: Replace the CPU board. | |

# 2. Trouble with the indication of a measured value

For trouble with the indication of measured values, see the following:

## 2.1 Multiple channels provide burnout or abnormal display.

| Check | Probable Causes | Suggested Remedy | Reference Page |
|---|---|---|---|
| If the signal is not properly inputted, a thermocouple or a resistance bulb provides burnout display. Or a voltage signal provides abnormal display. | | | |
| 1) Check if the wiring to the input terminal is properly connected. | Wrong wiring. | Connect properly. | |
| 2) Check if the input terminal and the main connector are properly connected. | The input terminal unit is not correctly installed. | Install correctly. | |
| 3) When the following related channels (such as CH1 - CH4 and CH2 - CH5) are abnormal, any of the A/D converter modules may be faulty.<br>(Internally parallel processed channel)<br>CH1 & CH4: CH7 & CH10<br>CH2 & CH5: CH8 & CH11<br>CH3 & CH6: CH9 & CH12 | A/D conversion module is faulty. | Replace A/D conversion module.<br>After replacement, adjust the input. | II. 3. Replacement of A/D converter module |
| 4) A/D converter control circuit and power supply may be defective. | Power supply is defective.<br>Card is damaged. | Replace.<br>PHA: replace the main board.<br>PHC: replace the AI board. | |

## 2.2 Some channels provide burnout or abnormal display.

| Check | Probable Causes | Suggested Remedy | Reference Page |
|---|---|---|---|
| 1) Check if wiring to the input terminal is properly connected. | Wrong wiring. | Wire properly. | |
| 2) Check the input signal for disconnection. | Wrong wiring. | Wire properly. | |
| 3) Check the input signal setting pins.<br>If it exceeds the max. allowable input voltage, the A/D converter module may be destroyed.<br>Thermocouple, resistance thermometer bulb ..... ± 10V<br>50mV, 500mV range ..... ± 10V<br>5V, 50V range ..... ± 100V | Setting of input setting pin is wrong. | Set properly. | Manual, Chap. 5. |
| 4) The A/D converter module may be faulty. | The A/D converter module is defective. | Replace.<br>After replacement, make an input adjustment. | II. 3.7 Replacement of A/D converter module |

## 2.3 Indication changes excessively.

| Check | Probable Causes | Suggested Remedy | Reference Page |
|---|---|---|---|
| 1) Check if the input signal is excessively deflected. | Input signal deflects violently. | Use an input filter. | Manual, chap.7 |
| 2) The A/D converter module may be faulty. | The A/D converter module is defective. | Replace. | II. 3.7 Replacement of A/D converter module |
| 3) The control circuit of the card may be faulty. | The card is damaged. | Replace the main board or AI board. | |

## 2.4 Erroneous indication is large or overrange/underrange is displayed.

| Check | Probable Causes | Suggested Remedy | Reference Page |
|---|---|---|---|
| 1) Check the input signal. | Input signal is abnormal. | Input the correct signal. | |
| 2) Check the input signal setting pin. | Setting of input setting pin is wrong. | Set correctly. | |
| 3) Check the following parameters on the input signal setting screen:<br>・The type of signal is correct.<br>・Rooter is ON.<br>・The industry value is set correctly.<br>・The differential operation is specified. | Input parameter setting is wrong. | Set correctly. | See Manual for:<br>Rooter setting<br>Industry value setting<br>Manual, Chap. 9. |
| 4) Regulate the measurement value input. | Not regulated properly. | Regulate the input. | |
| 5) Check if cold junction compensation error affects the thermocouple input.<br>・Cold contact temperature equals to that of the terminals.<br>・Adjust the cold contact temperature in fine adjustment mode. | Cold contact temperature is poorly adjusted. | Adjust the cold contact temperature.<br>Replace the A/D converter module.<br>After that, make an input adjustment. | II. 5. Use of TEST channel |
| 6) If errors are not corrected by adjustment, the A/D converter module may be faulty. | The A/D converter module is faulty. | | |

# 3. Error display on the front panel

When the recorder causes an error, it self-diagnoses the contents of the error, and displays an error message on the front panel.

## 3.1 Chart End is displayed.

| Check | Probable Causes | Suggested Remedy | Reference Page |
|---|---|---|---|
| 1) Check the remaining chart paper and the setting state of chart paper. If the paper runs short, chart end will be displayed intermittently. | Chart paper is short.<br>Chart paper is not properly set. | Set a new chart paper.<br>Set correctly. | |
| 2) Check the sensor system for abnormality. | | | |
| PHA: Check the chart end detector photo sensor for impurity. | The sensor is malfunctioning. | Clean the sensor. | |
| PHC: Check the chart end detector sensor for bends. | Sensor fixture is bent or broken. | Repair or replace. | |
| 3) If each of the above is found usual, the card may be abnormal. | The card is damaged. | PHA: Main board or repeating board.<br>PHC: Replace the CPU board. | |

## 3.2 Carriage Abnormal is displayed

| Check | Probable Causes | Suggested Remedy | Reference Page |
|---|---|---|---|
| When the power is turned on or while the recorder is recording, an error is sensed that the carriage unit is not returned to the Home position (Left end).<br>Once errors are detected, the carriage is not reset until the power is turned on again.<br>1) Turn off the power, and turn it on again.<br>2) When the recorder head does not completely move, check if: | | | |
| ・the carriage cable is cut | Rope is cut. | Replace. | II.3.8 Replacement of carriage cable |
| ・the carriage motor cable is connected. | Signal cables are not connected. | Connect cables. | |
| 3) When the recorder head moves, check if: | | | |
| ・the head is installed correctly (hits against something). | It is not installed correctly. | Install the head correctly. | |
| ・the carriage cable is wound or loosen. | Rope setting is faulty. | Wind rope correctly. | II.3.8 Replacement of carriage cable |
| ・the home position sensor is impure. | Sensor is contaminated or dusty. | Clean. | |
| 4) If each of the above items is not found faulty, the carriage motor may be faulty, or the power supply or card may be faulty. | Carriage motor is faulty.<br>Power supply is faulty.<br>Card is damaged. | Replace.<br>Replace the power supply unit.<br>PHA: main board or repeating board<br>PHC: Replace the CPU board. | |

### 3.3 Ink End is displayed.

| Check | Probable Causes | Suggested Remedy | Reference Page |
|---|---|---|---|
| The recorder detects ink shortage by counting the number of dots of ink injection. To replace an ink head, an Ink Alarm Clear action is required. | Ink alarm Clear is not carried out. | Carry out Ink Alarm Clear. | See Manual |
| If display does not disappear with the ink alarm clear action, the card unit may be faulty. | The card unit is faulty. | PHA: Replace the main board.<br>PHC: Replace the CPU board. | |

### 3.4 Battery Alarm is displayed.

| Check | Probable Causes | Suggested Remedy | Reference Page |
|---|---|---|---|
| 1) Check if the battery voltage is dropped, or connection is not wrong. | Battery voltage is dropped.<br>Battery connection is wrong. | Replace the battery .<br>Connect correctly. | See Manual, Chap. 8. |
| 2) If display does not disappear by battery replacement, the card unit may be defective. | The card unit is defective. | PHA: Replace the main board.<br>PHC: Replace the CPU board. | |

# 4. Abnormal test pattern print

f any problems about recording or printing occur, print the test pattern. Take remedy by judging from how the test pattern is printed.

## 4.1 The recorder does not print at all.

| Check | Probable Causes | Suggested Remedy | Reference Page |
|---|---|---|---|
| 1) Check the ink injection sound.<br>If the injection sound is not heard, head installation is not complete, or the connector pin at the rear of the head is probably broken. | Head installation is incomplete.<br>Head connector pin is broken. | Install the head correctly.<br>Replace the head. | |
| 2) Remove the head from the main unit and check : | | | |
| a) if the cap is left attached to the head. | The cap is not detached. | Detach the cap and install head | |
| b) if ink does not leak. | Ink leaks from the head. | Replace the head. | |
| c) Extrude ink. If the test pattern is not printed in full color, the head nozzle may be clogged with particles. | A nozzle is clogged. | Replace the head | |
| 3) Check that the head driven cable connector is not disconnected. | Cable connection is poor. | Connect cable correctly. | |
| 4) Try printing again. And if it is still not printing at all, the power supply or card unit may be defective. | Power supply is faulty.<br>The card unit is faulty. | Replace the power supply:<br>PHA: replace the main board.<br>PHC: replace the CPU board. | |

## 4.2 One color or some colors are not printed.

| Check | Probable Causes | Suggested Remedy | Reference Page |
|---|---|---|---|
| 1) Check the connector pin at the rear of the head. | The head connector pin is broken. | Replace the head. | |
| 2) Try to extrude ink.<br>Bring blotting cloth into contact with the head end to check that all colors are printed out.<br>Repeat this procedure several times until all colors are printed. If not, the nozzle may be clogged with dust. | The nozzle is clogged. | Replace the head. | |

### 4.3 Chart width is not sufficient to allow printing to the chart end.

| Check | Probable Causes | Suggested Remedy | Reference Page |
|---|---|---|---|
| 1) Adjust the head position.<br>2) When the position is well adjusted, the chart width is too narrow to print to the end, so make an initial start.<br>If not adjusted, the card unit seems to be defective. | The head position is not sufficiently adjusted.<br><br>The card unit is defective. | Adjust the head position.<br><br>PHA: Replace the main board.<br>PHC: Replace the CPU board. | Manual, Chap. 9. |

### 4.4 Printing characters are blurred.

| Check | Probable Causes | Suggested Remedy | Reference Page |
|---|---|---|---|
| 1) Check the head backlash.<br>Deflection per dotted line seems attributed to the backlash.<br>2) Check the carriage traveling arbor for impurities.<br><br>3) When ink injection is unstable, remove the head and try to extrude ink. | Backlash is deflected.<br><br>The carriage traveling arbor is dirty.<br><br>Air bubbles are mixed in the head nozzle. | Adjust the backlash.<br><br>Clean with a soft cloth.<br><br>Extrude ink. | Manual, Chap. 9. |

### 4.5 Print color is not correct.

| Check | Probable Causes | Suggested Remedy | Reference Page |
|---|---|---|---|
| 1) Make an initial start.<br>2) If not corrected, the card unit seems faulty. | The card unit is faulty. | PHA: replace the main board.<br>PHC: replace the CPU board. | |

# 5. Error in recording

For trouble about trend record or digital printing, the following troubleshooting guide will help you in solving problems.

## 5.1 Some channels are not recorded.

| Check | Probable Causes | Suggested Remedy | Reference Page |
|---|---|---|---|
| 1) Print the test pattern to check if all colors are printed out. | The head is faulty. | Check the test pattern. | |
| 2) Check that no channel is recorded beyond the left and right margins (overrange/ underrange). | Recording beyond the range. | | See Chap. 5.2 " below. |
| 3) Check if the input setting is skipped. | Input setting is wrong. | Set properly. | |
| 4) Try an initial start. If it is still not recorded, the card unit may be faulty. | The card unit is defective. | PHA: Replace the main board.<br>PHC: Replace the CPU board. | |

## 5.2 Recording is scaled out.

| Check | Probable Causes | Suggested Remedy | Reference Page |
|---|---|---|---|
| 1) Check if the indication of the measured value is overranged or underranged, and check the value for burnout. | Input is unusual. | | 2. Abnormal measured values |
| 2) Check if the measured values displayed are within the range. | Recording range is not properly set. | Set the range properly. | |

## 5.3 Recording position is deviated.

| Check | Probable Causes | Suggested Remedy | Reference Page |
|---|---|---|---|
| 1) Check if the displayed measured values are aligned with the recording position. | Error of measured value. | | 2.Abnormal measured values |
| | Recording position is deviated. | Correct the recording position. | Manual, Chap. 9 |
| 2) Check if the recording format is properly set. (Auto range, zoom, zone record) | Recording format is improperly set. | Set the format properly. | Manual, Chap. 7 |

## 5.4 Recording is printed step-like.

| Check | Probable Causes | Suggested Remedy | Reference Page |
|---|---|---|---|
| Check the industrial value settings.<br>If the industrial values are set to integers between 1 and 10, recording is printed out in steps since the resolution is in an increment of 10. In this case, add decimal points like 1.0 to 10.0 to raise resolution. | Industrial value resolution is low. | Add decimal point to increase the resolution . | |

### 5.5 Recording is intermittent. Continuous recording is impossible.

| Check | Probable Causes | Suggested Remedy | Reference Page |
|---|---|---|---|
| Recording is continuous in the range of 300mm/H with PHA, and 400mm/H with PHC. If recording is beyond this range, it is intermittent. | Chart speed is high. | Decrease the speed. | |

### 5.6 Trend recording is possible, but characters are not printed.

| Check | Probable Causes | Suggested Remedy | Reference Page |
|---|---|---|---|
| The recording chart speed is too high to print characters.<br>Continuous: 300mm/H with PHA,<br>400mm/H with PHC<br>Dot: 50mm/H | Chart speed is high. | Decrease the speed. | |

### 5.7 Recording color is changed midway through recording.

| Check | Probable Causes | Suggested Remedy | Reference Page |
|---|---|---|---|
| Orange, green and purple are formed by mixing, as follows:<br>Orange (CH1, CH6) — Red - Blue<br>Green (CH2, CH7) — Yellow - Blue<br>Purple (CH3, CH8) — Blue - Red<br>If any of the colors above are missing, the recording color looks different. | Ink is short. | Replace the head. | |

### 5.8 Recording and printing is duplicated.

| Check | Probable Causes | Suggested Remedy | Reference Page |
|---|---|---|---|
| It may be influenced by the head backlash. | Influence of backlash. | Adjust head backlash.<br>If the carriage arbor is dirty, clean it. | Manual, Chap. 9 |

### 5.9 Ink is blurring or smudging.

| Check | Probable Causes | Suggested Remedy | Reference Page |
|---|---|---|---|
| 1) Check the type or quality of the recording chart.<br>If the quality of the recording chart is different, ink may dry late or may be smudging.<br>Type of standard recording chart<br>PHA: PEX00BL1-1000B<br>PHC: PEX00DL1-5000B | Chart is not properly set. | Use the standard recording chart. | |
| 2) Check if the trend recording lines of some channels overlap and are not printed. | Trend recording lines overlap. | Deviate the recording range or separate the recording zone. | |
| 3) Try to extrude ink. | Air bubbles are contained in the head nozzle. | Extrude ink. | |

### 5.10 Trend recording is dotted turbulently.

| Check | Probable Causes | Suggested Remedy | Reference Page |
|---|---|---|---|
| 1) Check if indication of measured values is not drifted. | Indication is drifted. | | 2. Abnormal measured values |
| 2) Check if backlash is matched. | Error on backlash. | Adjust backlash. | Manual, Chap. 9 |
| 3) When dotted recorder is used, check if multi-channel trend recording lines does not overlap | Trend recording lines overlap. | Deviate the recording range or separate the recording zone. | |

### 5.11 ON/OFF of recording is repeated. Message print is repeated.

| Check | Probable Causes | Suggested Remedy | Reference Page |
|---|---|---|---|
| If the external control RECORD START/STOP contacts are unstable or the chart end comes out or don't come out, recording ON/OFF is repeated. When Message Print is specified at the beginning of recording, Message printing is repeated. | | | |
| 1) Remove the external control unit. | RECORD START/STOP contact input signal is abnormal. | Input correct contact signal. | |
| 2) Check if the Chart End is displayed. | Chart end. | | 3. Error display. |

### 5.12 Unusual sound is heard.

| Check | Probable Causes | Suggested Remedy | Reference Page |
|---|---|---|---|
| Inspect the carriage travel arbor for contamination. | Traveling arbor is dirty. | Use a soft cloth to clean the arbor. | |

# 6. Error in chart feed

For troubles about chart paper is not fed or paper does not advance the following troubleshooting chart will help you in solving the problems.

## 6.1 Paper is not fed by pressing FEED.

| Check | Probable Causes | Suggested Remedy | Reference Page |
|---|---|---|---|
| 1) Check if the recording paper is properly set.<br>Chart feed is impossible with paper set afloat. | Recording paper is not set properly. | Set properly. | |
| 2) Check if the chart feed motor cable is disconnected. | Chart feed motor cable is disconnected. | Connect cables. | |
| 3) If paper is not fed with any of the above items, the chart feed motor, power supply or card unit is found to be faulty. | Chart feed motor is defective. | Replace. | |
| | Power supply unit is defective. | Replace. | |
| | Card unit is defective. | PHA: Replace the main board.<br>PHC: Replace the CPU board. | |

## 6.2 Paper is not fed.

| Check | Probable Causes | Suggested Remedy | Reference Page |
|---|---|---|---|
| 1) Check if the chart perforation is aligned with the sprockets.<br>Check if the chart end is broken or bent. | Recording chart is not properly set. | Set properly. | |
| 2) Check if the paper setting direction is correct. (Chart is set vertically with PHC) | Recording chart is not properly set. | Set properly. | |
| 3) Check the following items with PHC. | | | |
| · Paper retainer at the rear of chart cassette is too strong. | Paper retainer pressure is large. | Decrease the pressure. | |
| · Main frame plate spring pressure is too strong. | Plate pressure is large. | Bend plate spring slightly. | |
| · Chart cassette gear and chart feed motor gear are not properly engaged. | Gear engagement is not proper. | Adjust the gear position. | |
| 4) If paper feed is not corrected by checking any of the above items, the chart feed motor, power supply or card unit is found to be faulty. | Chart feed motor is defective. | Replace. | |
| | Power supply unit is defective | Replace. | |
| | Card unit is defective. | PHA: Replace the main board.<br>PHC: Replace the CPU board. | |

### 6.3 Paper will not thread.

| Check | Probable Causes | Suggested Remedy | Reference Page |
|---|---|---|---|
| 1) Check if the chart paper is properly set:<br>Check if the chart paper end does not tear or bend.<br>Check if the sprocket is not leaned. | Chart paper is not properly set. | Set correctly. | Manual, Chap. 5. |
| 2) Check if the head comes in contact with chart paper. | Paper contacts with the head. | Set the head properly. | |

### 6.4 Paper is not properly folded.

| Check | Probable Causes | Suggested Remedy | Reference Page |
|---|---|---|---|
| 1) Check the type or material of chart paper. Some chart paper cannot be well folded depending upon the material of chart paper.<br>Types of standard chart paper:<br>PHA: PEXOOBL1-1000B<br>PHC: PEXOODL1-5000B | Chart paper is not properly set. | Use the standard chart paper. | |
| 2) Check if the chart paper is properly set. | The chart paper is not properly set. | Set it properly by folding a length of 2-3 sheets at each perforated line. | |
| 3) Leaving the chart paper set for a long time may make it difficult to fold. | It has been left unused for a long time. | Feed paper a little with FEED and then proceed to recording. | |

# 7. Error in key action

## 7.1 Key operation is impossible.

| Check | Probable Causes | Suggested Remedy | Reference Page |
|---|---|---|---|
| 1) Confirm that key action is impossible during printing.<br>It is impossible to use the key while a daily report, an integrated list or a momentary value list, etc. is printing. | Key is used during printing. | Press the LIST key to stop list printing. | |
| 2) Check if error messages are displayed.<br>If an error such as Chart End or Carriage Abnormal is caused, the setting screen does not appear. | Error is being caused. | Clear the Error state. | |
| 3) Make an initial start.<br>If not corrected by the above remedies, the unit card is found faulty. | The card unit is defective. | PHA: Replace the main board,<br>PHC: Replace the CPU board. | |

## 7.2 No setting can be made since your password slipped in mind

| Check | Probable Causes | Suggested Remedy | Reference Page |
|---|---|---|---|
| Make an initial start. | | Make an initial start. | II. 4. Initial Start |

## 7.3 Closing the door turns recording ON/OFF or changes display.

| Check | Probable Causes | Suggested Remedy | Reference Page |
|---|---|---|---|
| The back door may come in contact with the key switch. | Door is faulty. | Replace. | |

# 8. Other errors

## 8.1 External control is impossible. [Record ON/OFF, Selection of chart speed, Momentary value list printing]

| Check | Probable Causes | Suggested Remedy | Reference Page |
|---|---|---|---|
| 1) Check if the external control unit is properly installed.<br>Check if the connector pin is properly connected. | The external control unit is not properly installed. | Install properly. | |
| 2) Check if D11 or D12 is specified with message printing. | Message print is specified. | Change the Message print. | |
| 3) Check if an alarm latch is specified. | Used for alarm latch OFF. | Turn the alarm latch OFF. | |

## 8.2 Alarm signal is not outputted.

| Check | Probable Causes | Suggested Remedy | Reference Page |
|---|---|---|---|
| 1) Check if the alarm output unit is properly installed.<br>Check that the connector pin is properly connected. | The unit is not properly installed. | Install the unit properly. | |
| 2) Check if the alarm output contact capacity is sufficient.<br>Relay contacts: 240VAC/3A,<br>30V DC/3A<br>If the output power exceeds the contact capacity, it may cause damage to the system. | The alarm output power exceeds the specified contact capacity.<br>The alarm unit is defective. | Install relays with a large contact capacity external to the system.<br>Replace the alarm unit. | |

# II. Maintenance Information

# 1. Name of each part

## 1.1 Structure of PHA and the name of each unit

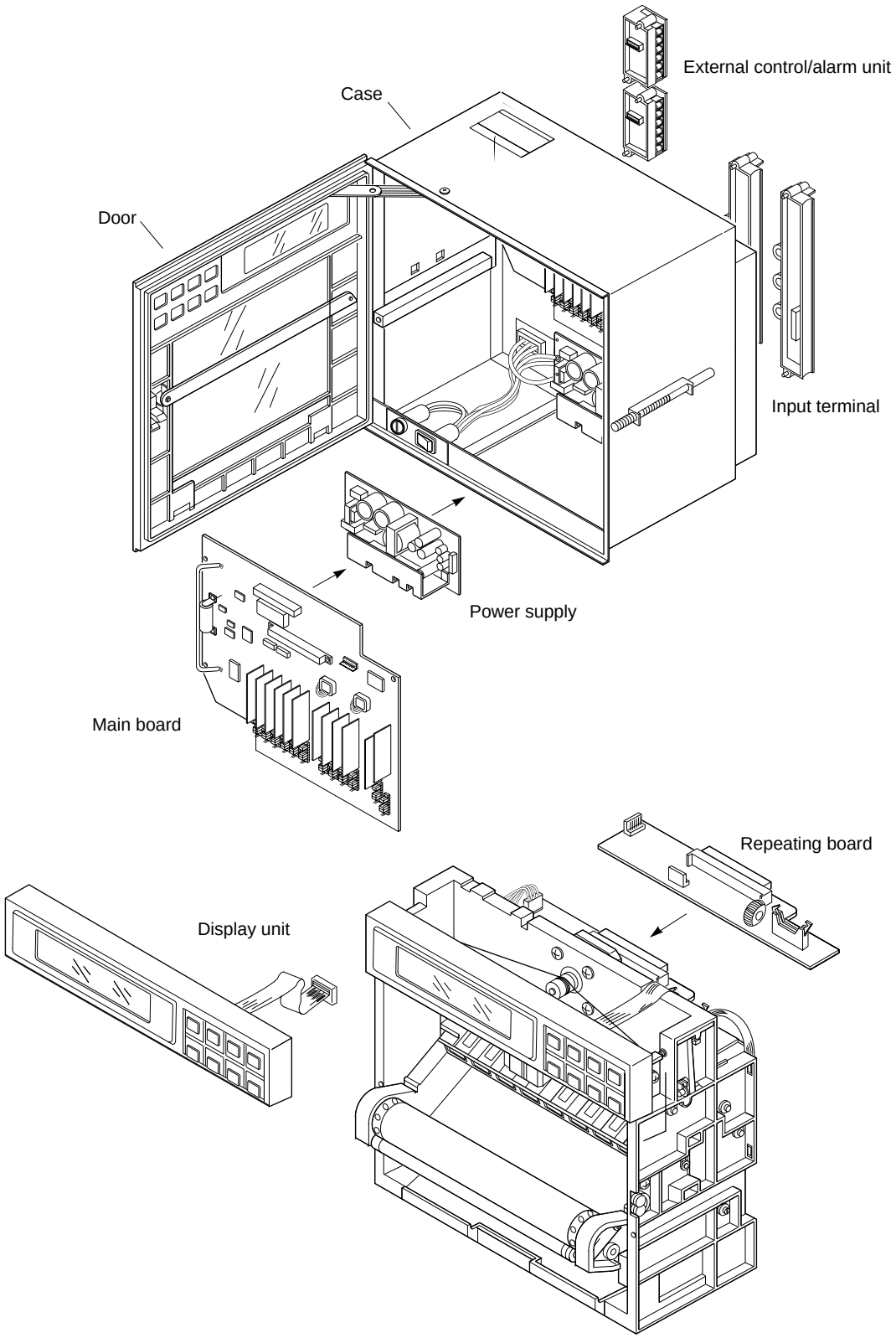

## 1.2 Structure of PHC and the name of each unit

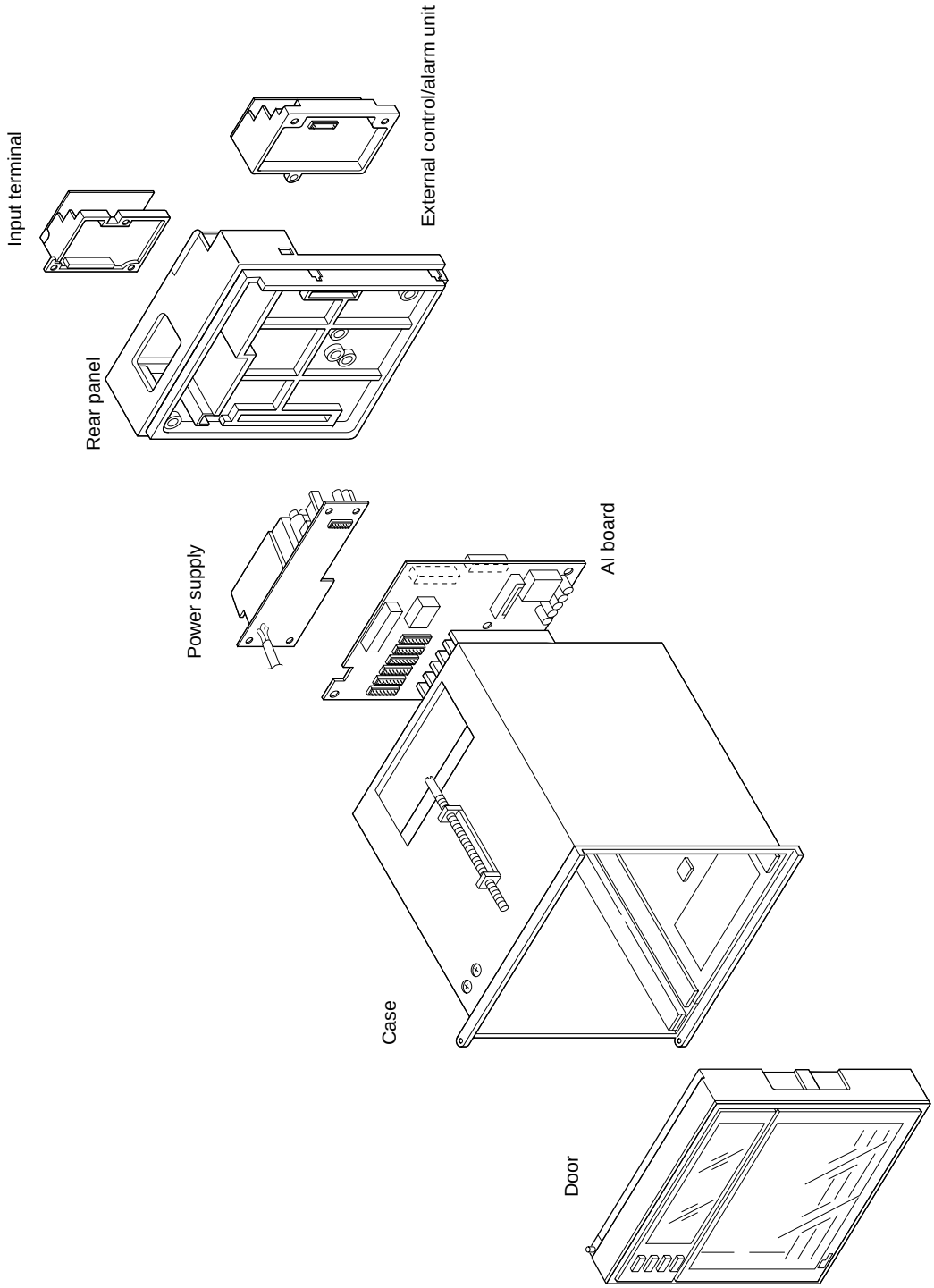

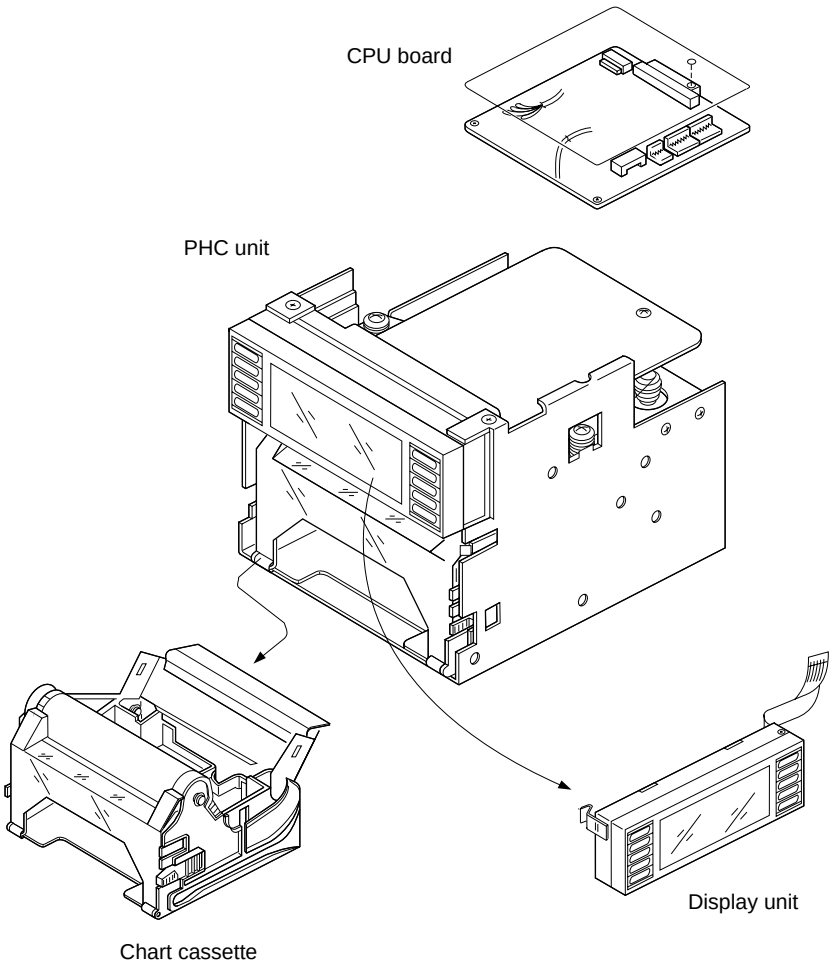
CPU board
PHC unit
Display unit
Chart cassette

# 2. Internal block diagram

## 2.1 PHA

Following diagram shows the internal block diagram of PHA and the connections between component units.

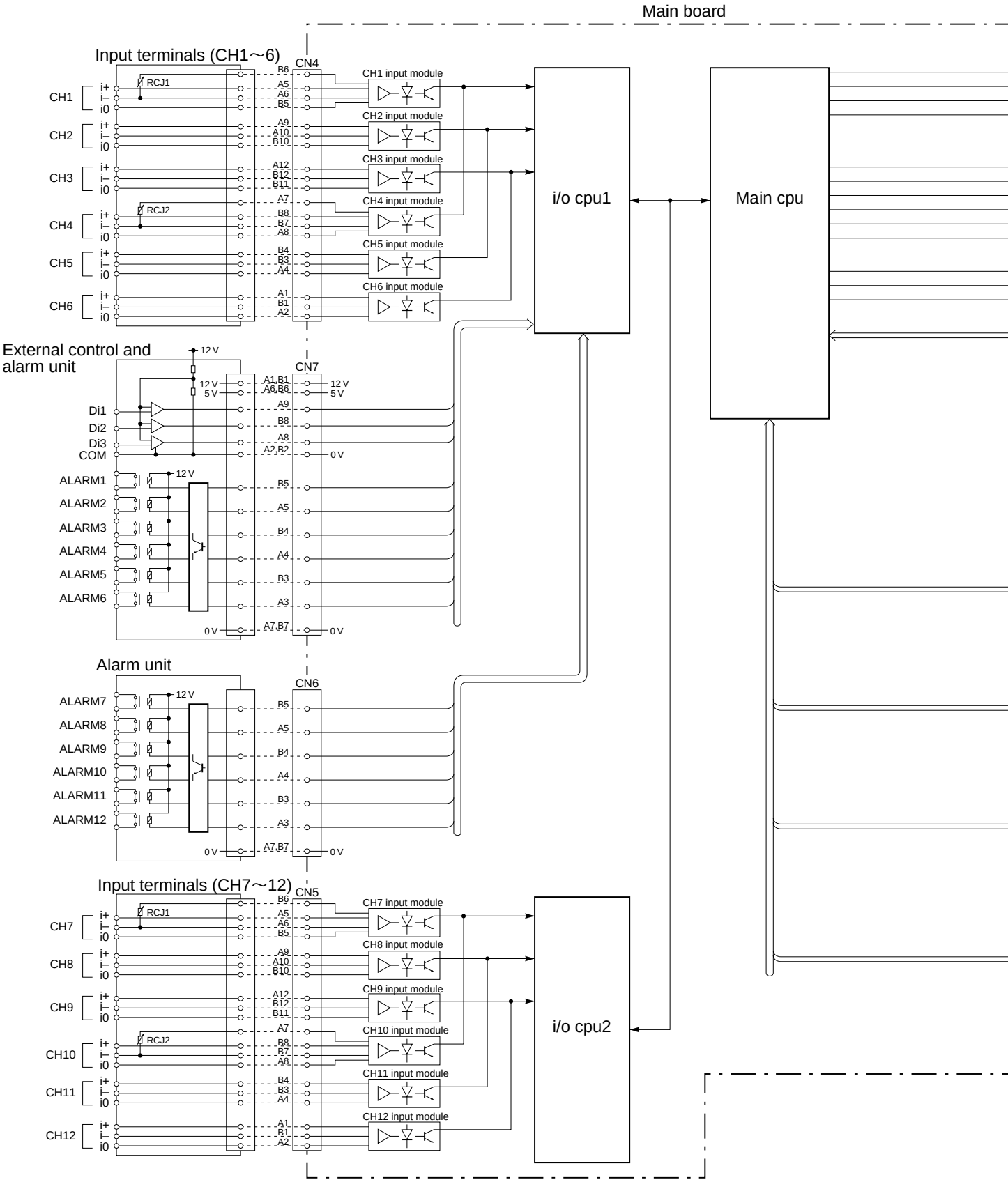

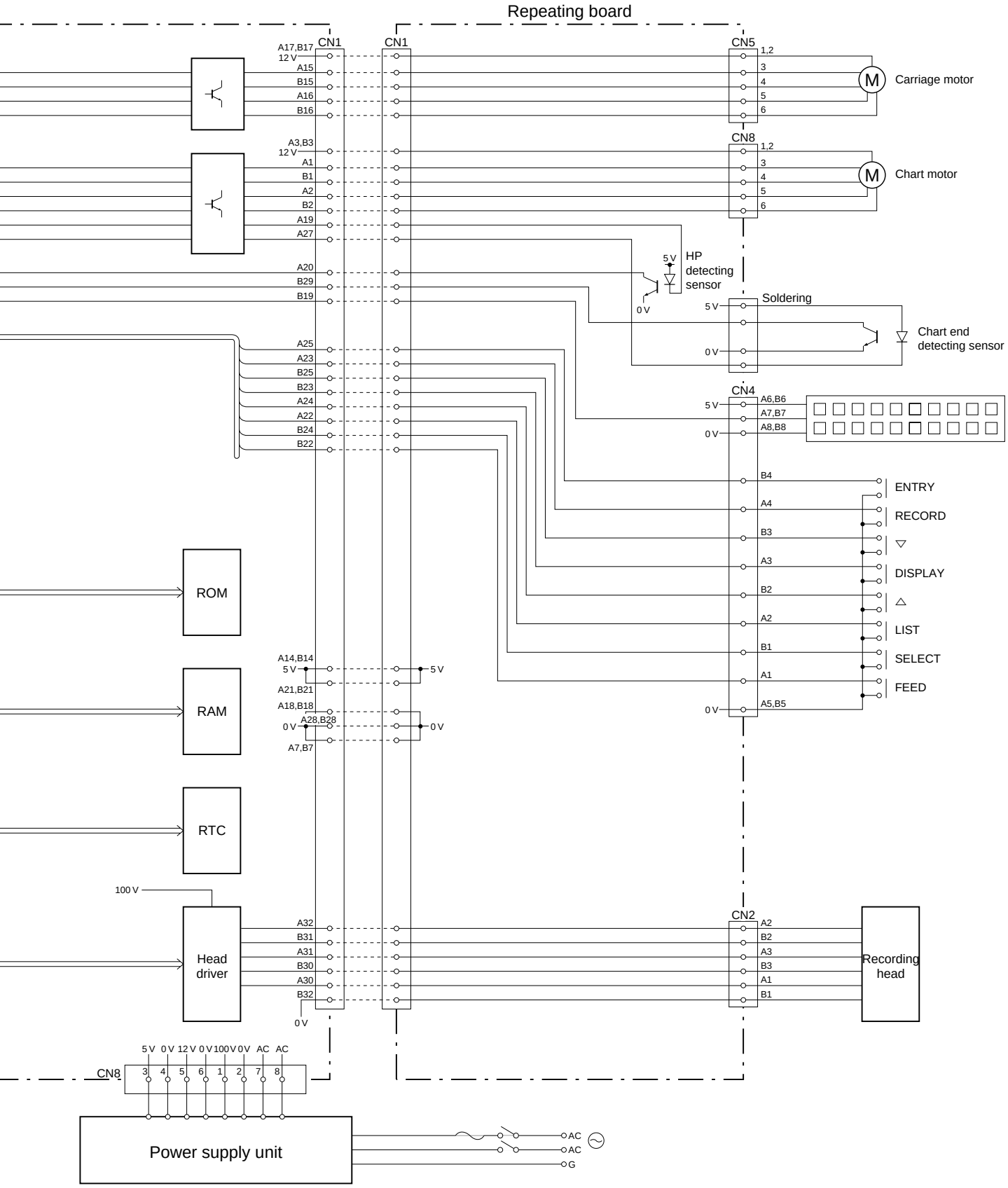
Repeating board
CN1
CN1
CN5
CN8
CN4
CN2
CN8
A17,B17
12 V
A15
B15
A16
B16
A3,B3
12 V
A1
B1
A2
B2
A19
A27
A20
B29
B19
A25
A23
B25
B23
A24
A22
B24
B22
A14,B14
5 V
A21,B21
A18,B18
A28,B28
0 V
A7,B7
5 V
0 V
1,2
3
4
5
6
Carriage motor
Chart motor
5 V
HP
detecting
sensor
0 V
Soldering
Chart end
detecting sensor
A6,B6
A7,B7
A8,B8
B4
A4
B3
A3
B2
A2
B1
A1
A5,B5
ENTRY
RECORD
DISPLAY
LIST
SELECT
FEED
ROM
RAM
RTC
100 V
Head
driver
A32
B31
A31
B30
A30
B32
A2
B2
A3
B3
A1
B1
Recording
head
5 V 0 V 12 V 0 V 100 V 0 V AC AC
3 4 5 6 1 2 7 8
Power supply unit
AC
AC
G

## 2.2 PHC

Following diagram shows the internal block diagram of PHC and the connections between component units.

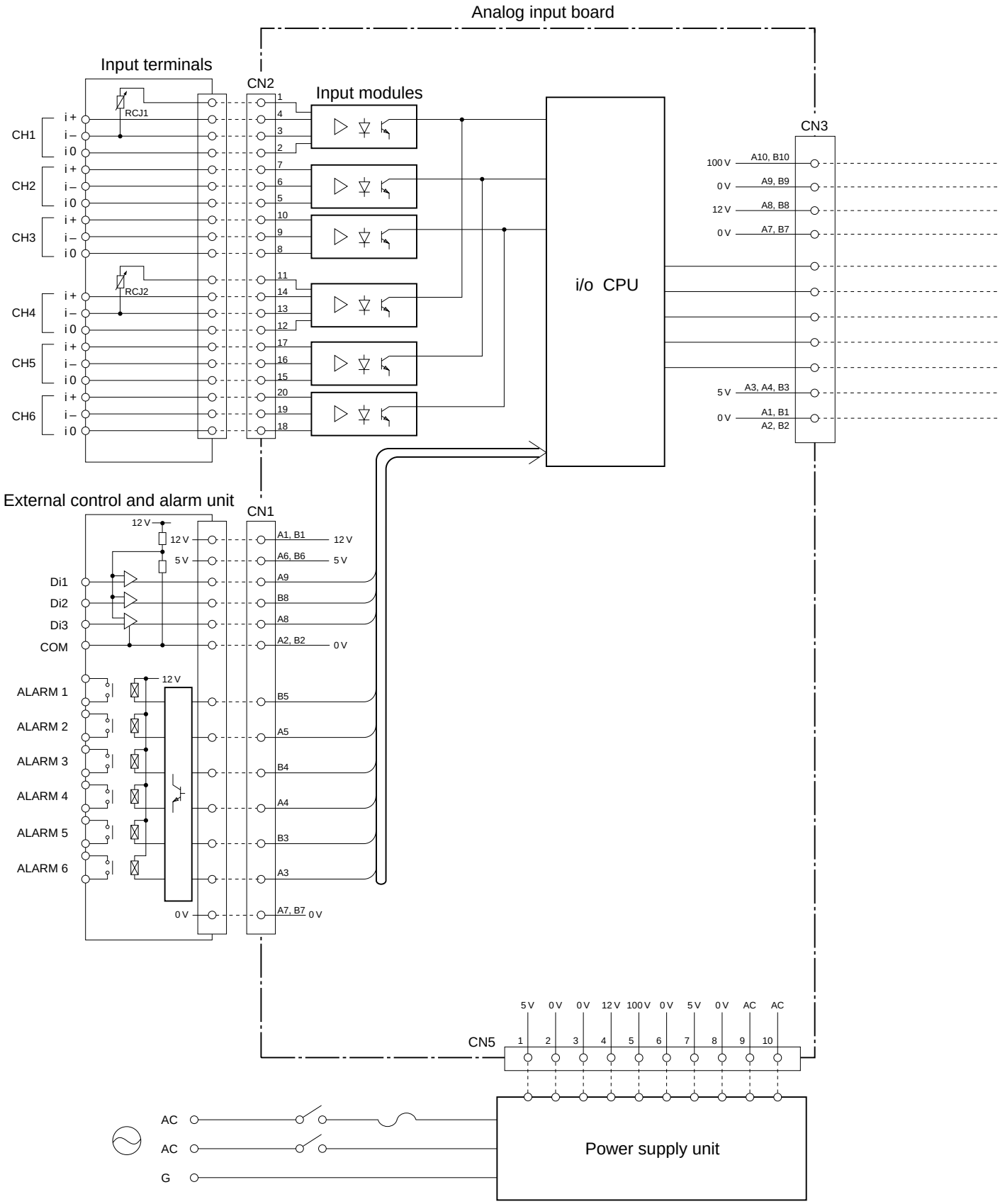

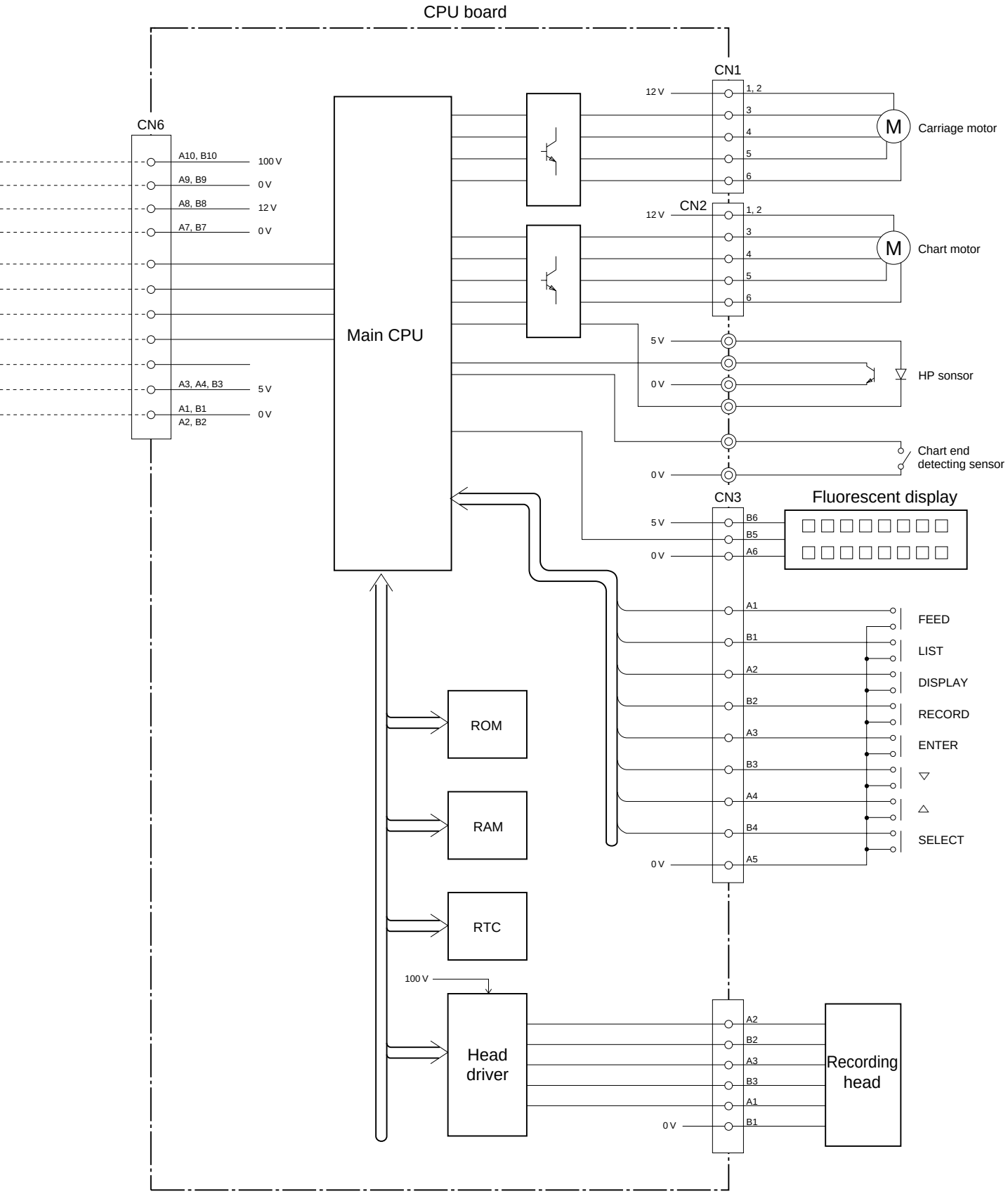
CPU board
CN6
A10, B10
100 V
A9, B9
0 V
A8, B8
12 V
A7, B7
0 V
A3, A4, B3
5 V
A1, B1
A2, B2
0 V
Main CPU
CN1
12 V
1, 2
3
4
5
6
M
Carriage motor
CN2
12 V
1, 2
3
4
5
6
M
Chart motor
5 V
0 V
HP sonsor
Chart end
detecting sensor
0 V
CN3
Fluorescent display
5 V
0 V
B6
B5
A6
A1
B1
A2
B2
A3
B3
A4
B4
A5
0 V
FEED
LIST
DISPLAY
RECORD
ENTER
▽
△
SELECT
ROM
RAM
RTC
100 V
Head
driver
A2
B2
A3
B3
A1
B1
0 V
Recording
head

# 3. Replacement

## 3.1 Replacement of Model PHA main board

**Step 1** Turn off the power.

**Step 2**

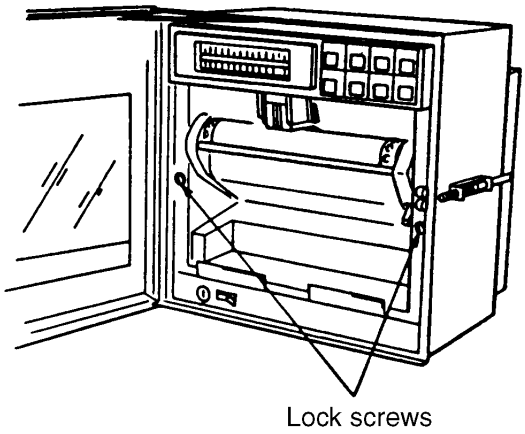


Remove the right and left lock screws by turning them counterclockwise.

**Step 3**

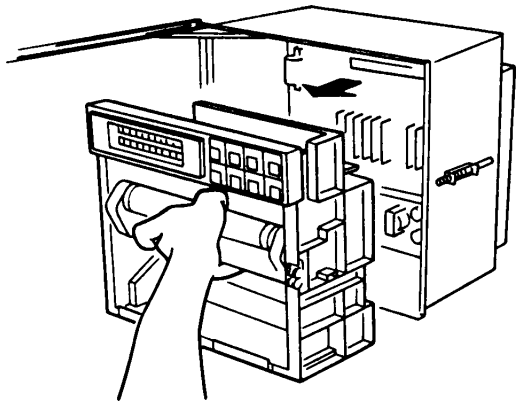

Grip the paper feed frame by hand and pull it firmly toward you, and the main unit can be removed.

**Step 4**

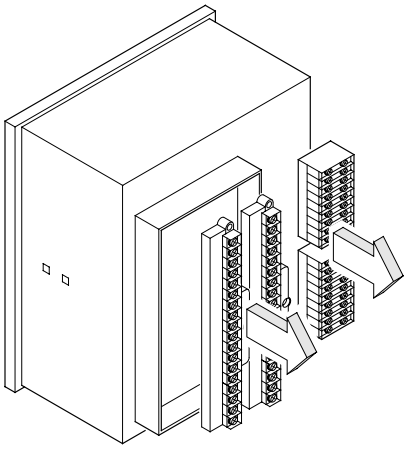

Remove the external control/alarm units from the rear panel of the main unit for easy re-assembly.

**Step 5** Disconnect the cable from the power unit.

**Step 6**

| | |
|---|---|
| 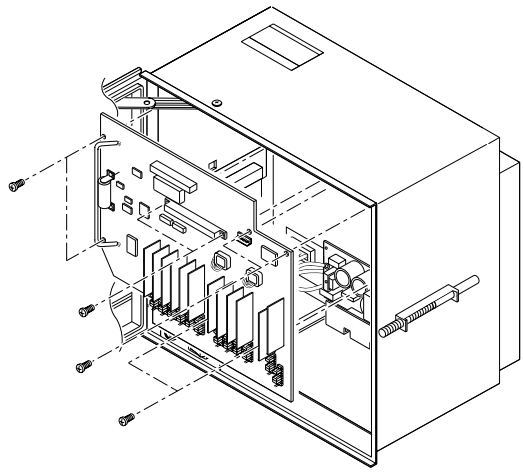 | Remove 8 lock screws and remove the main board. |

**Mounting**

**Step 7** For mounting procedures, reverse the procedures in step 1 to step 7.

## 3.2 Replacement of PHA relay board

**Step 1** Turn off the power.

**Step 2**

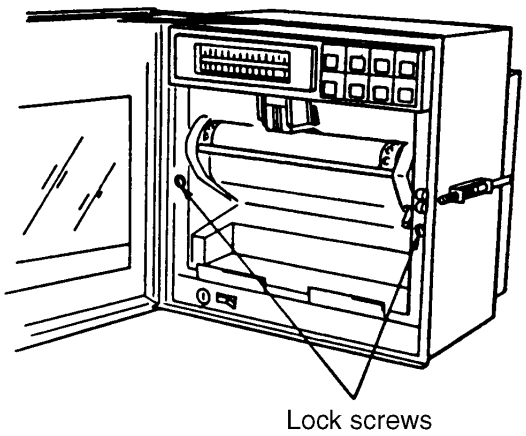


Remove the right and left lock screws by turning them counterclockwise.

**Step 3**

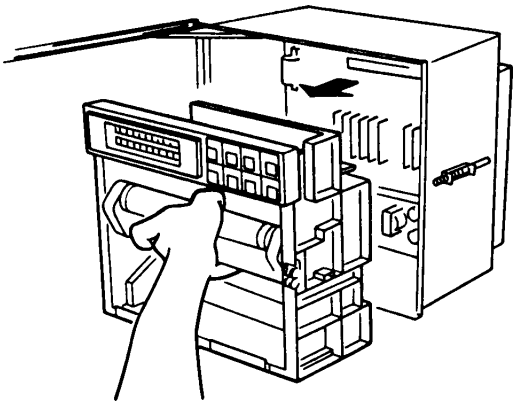

Grip the paper feed frame and pull it firmly toward you, and the main unit can be removed.

**Step 4**

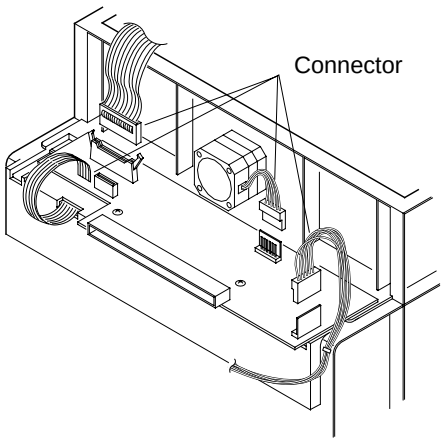


Remove all connectors (4) from the relay board and main unit.

**Step 5**

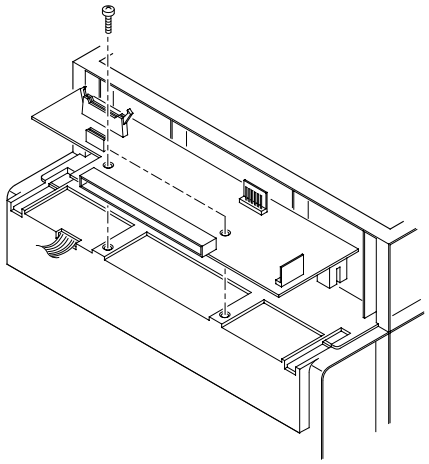

Remove 2 screws and remove the relay board from the main unit

Note) Use care when removing screws to avoid dropping the screw nuts inside of the machine.

**Step 6** Remove the remaining 4 cables by soldering. Now, The removing procedure has been completed.

**Mounting**

**Step 7** Solder 4 cables according to the color and number given below:
A combination of color and number
①-black, ②-red, ③-blue, √ -orange

**Step 8**

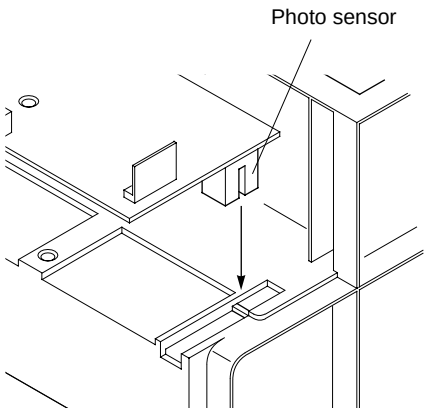


Mount the relay board on the main unit.
After checking that the detector unit of the photo sensor is aligned with the recording head, install two screws.

**Step 9** From the next procedures, reverse the order to step 4.

### 3.3 Replacement of Model PHA power unit

**Step 1** Turn off the power and remove receptacles.

**Step 2**

| | |
|---|---|
| 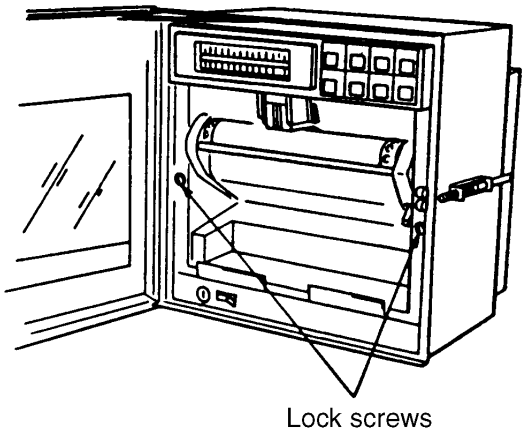 | Remove the right and left lock screws by turning them counterclockwise. |

**Step 3**

| | |
|---|---|
| 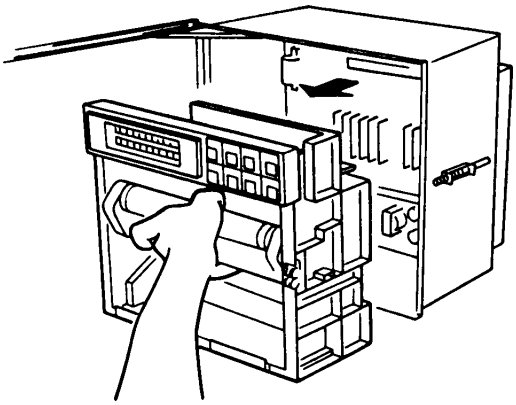 | Grip the paper feed frame and pull it firmly toward you.<br>This detaches it from the main unit. |

**Step 4** Disconnect the cables from the main board.

**Step 5**

| | |
|---|---|
| 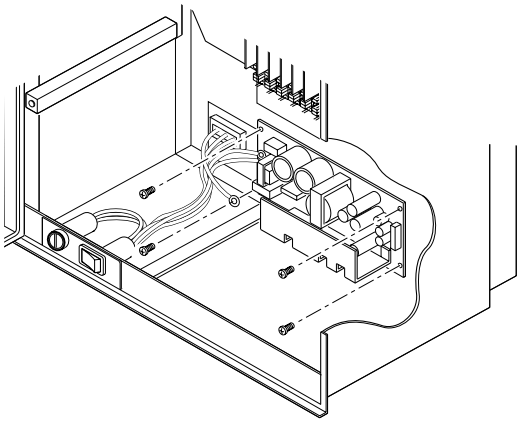 | Remove 4 screws from the corner of the main board.<br>Since the GND is attached to the screws below the left , use care about it when mounting the unit. |

**Step 6**

| | |
|---|---|
| 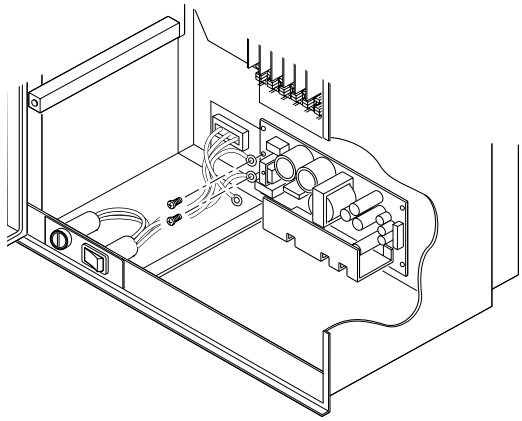 | Disconnect the cable from the power terminal, and remove the power unit.<br>Now, the removing procedures are completed. |

**Mounting**

**Step 7** Mount by reversing the replacement order.

### 3.4 Replacement of PHC CPU board

**Step 1** Turn off the power supply.

**Step 2** Open the front panel and remove the main unit as shown below.

**Step 3**

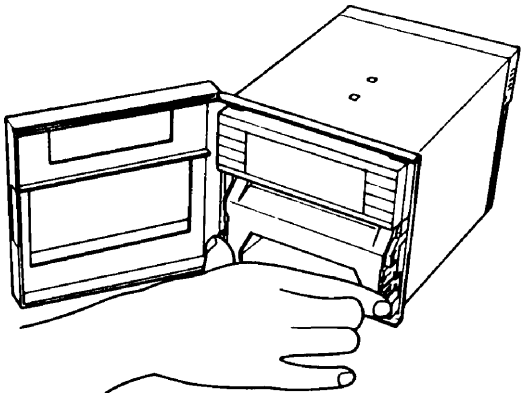

Hold the paper feed unit drawing levers by fingers and pull the paper feed unit toward you.

**Step 4**

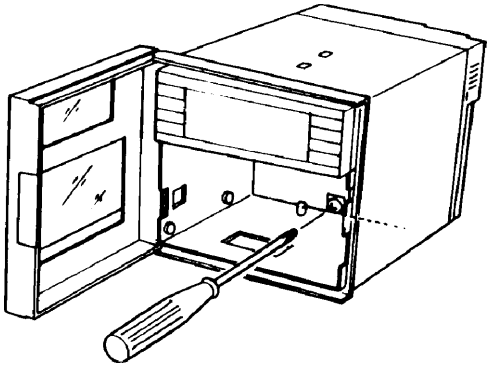

Loosen the lockscrew (M4) inside the unit by using a driver.

**Step 5**

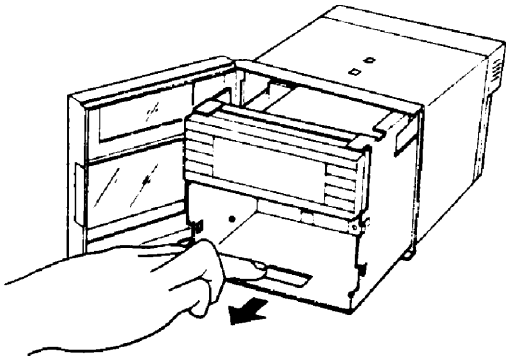

Press down the rectangular hole of the bottom base and pull it toward you, the main unit can be removed.

**Step 6**

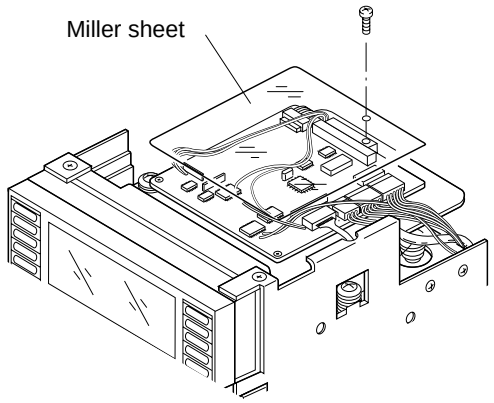


Remove Miller sheet

**Step 7**

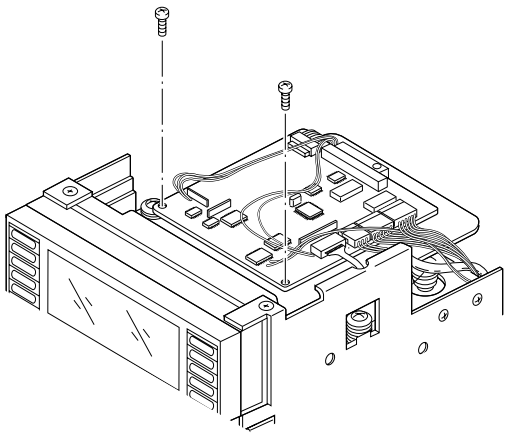

Remove two screws fixing the CPU board.

**Step 8**

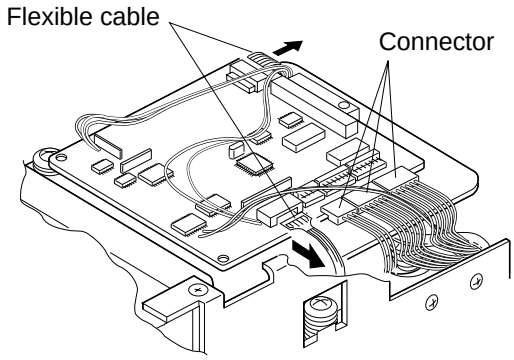


Use care when mounting the flexible cables on the display and the chart paper to prevent tear. Remove the remaining 3 screws.

| | | |
|---|---|---|
| **Step 9** | 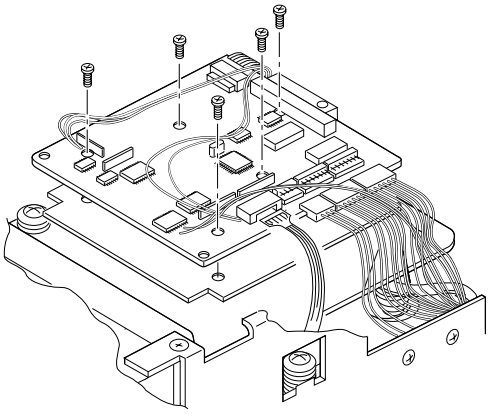 | Remove gland plane and remove 3 cables by soldering.<br>• Battery cable<br>• Chart end sensor cable<br>• Sensor cable for head position detection<br>Now, it completes removing step. |

**Mounting**

**Step 10** Reverse the preceding steps when mounting.

### 3.5 Replacement of AI board of Model PHC

**Step 1** Turn off the power and disconnect a receptacle.

**Step 2** Remove all terminals from the rear of the unit.

**Step 3**

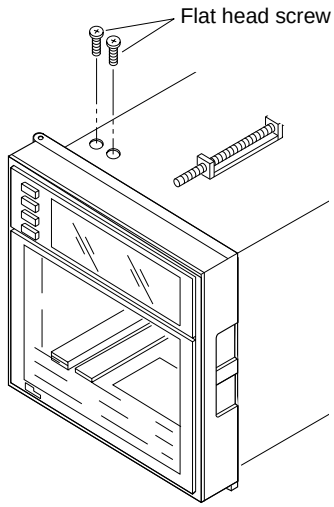


Remove flat head screws of the power switch.

**Step 4**

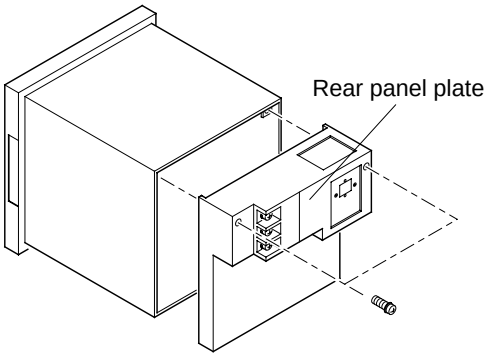


Remove 2 screws from the rear panel plate, and remove the rear panel plate.
Note) Use care not to drop nuts.

**Step 5**

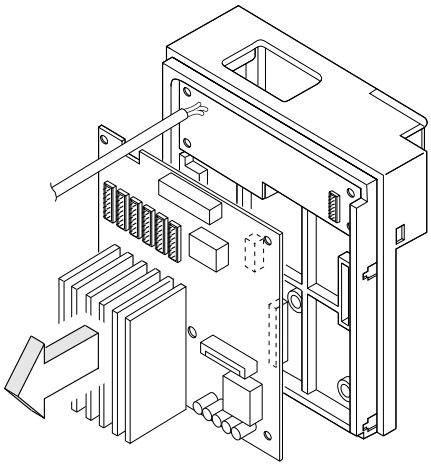

Remove the connectors from the power unit and remove the AI board.
Note) When electrical units are mounted, remove the support for electrical units and remove the AI board.
Now, it completes removing steps.

**Mounting**

| | | |
|---|---|---|
| **Step 6** | 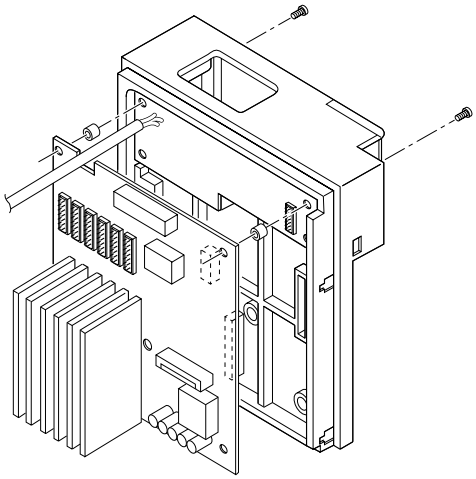 | For mounting, reverse the preceding steps.<br>Note) Keep in mind that spacers should be mounted when the rear panel plate is mounted. |

### 3.6 Replacement of Model PHC power unit.

**Step 1** Remove the AI board. (refer to Replacement of AI board for Model PHC)

**Step 2**

| | |
|---|---|
| 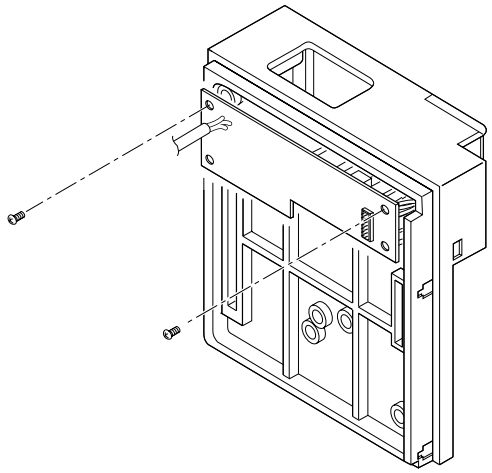 | Remove 2 screws fixing to the rear panel plate.<br>Note) Use care when removing screws fixed to both ends them to avoid dropping nuts. |

**Step 3**

| | |
|---|---|
| 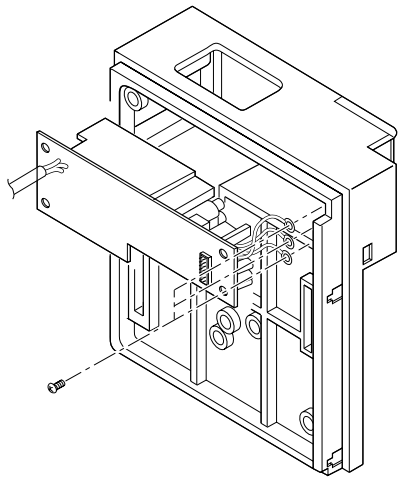 | Remove the power unit.<br>Finally, it is completed by removing the power cables |

**Mounting**

**Step 4** For mounting, reverse the preceding steps to mount.

## 3.7 Replacement of input module

**Step 1**

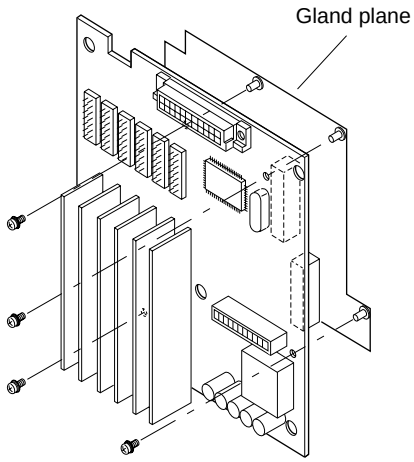


Removing card and gland plain:
For Model PHA, the input modules are mounted on the main board, and the AI board for Model PHC. Since the gland plain is connected to the card, remove the card. The following shows an example of the AI card as well as the AI card.

**Step 2**

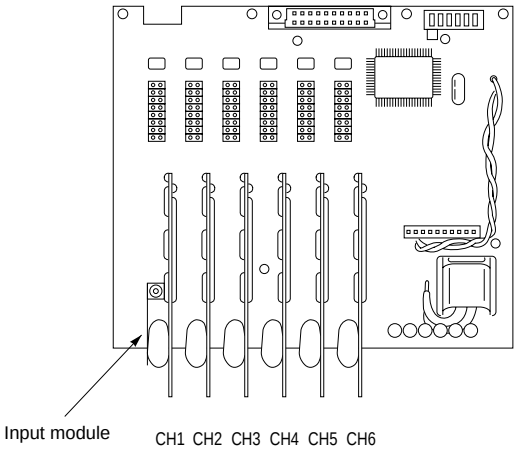


Replacement of input module
Remove any defective input module by using a solder absorbing device, replace it with new one (by soldering).

**Step 3**

Input calibration
Perform calibration of the channel of which the input module was replaced. For input calibration, refer to Instruction Manual, Chapter 5.
When CH1, CH4, CH7 or CH10 is replaced, it is indispensable to make a calibration of cold junction compensation. Refer to II. 5 Use of TEST channel.

## 3.8 Replacement of Rope

### 3.8.1 Replacement of PHA

**Step 1**

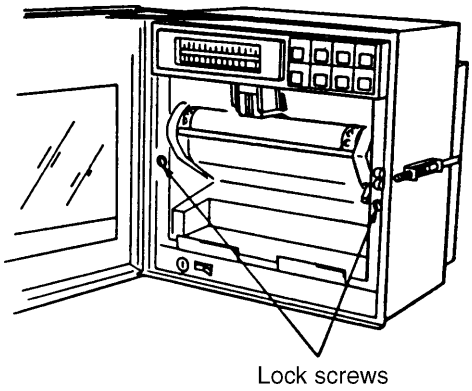


Remove the paper feed frame by turning lock screws (on the right and left) counter-clockwise.

**Step 2**

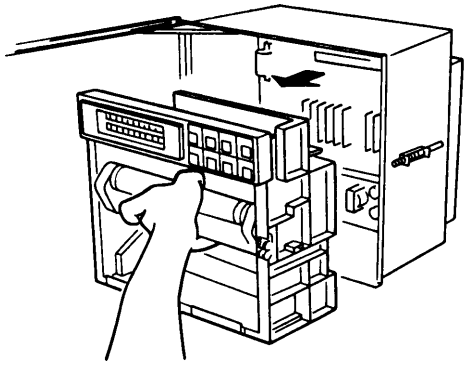

Pull the paper feed frame forward to remove the main unit.
Since a bearing from the tension fixtures hooks the case, pull the main unit forward while pressing it inside with a small tool like a driver.
Tension fixture and the bearing are described in ≈ .

**Step 3**

Remove the display unit
- Loosen two screws on both sides.
- Remove the connector in the rear.

↓

Remove the display unit.

**Step 4**

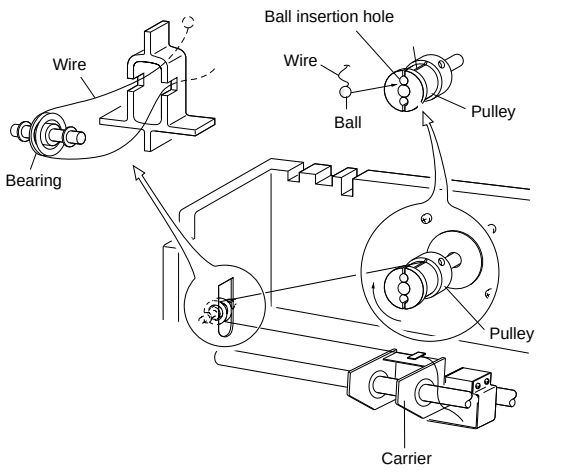


Attach the left-handed wire to the pulley through the bearing.

**Step 5**

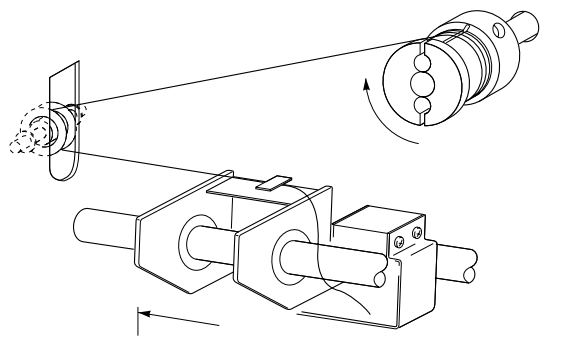

Wind wire attached to the pulleys

**Step 6**

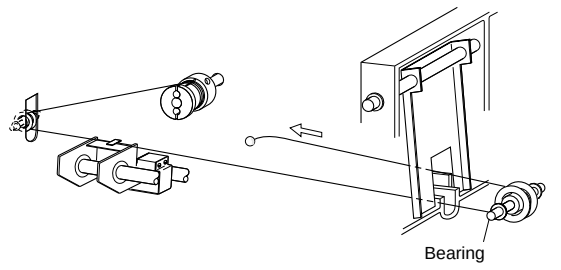


Attach the right-hand wire to the pulley side through the bearing.

**Step 7**

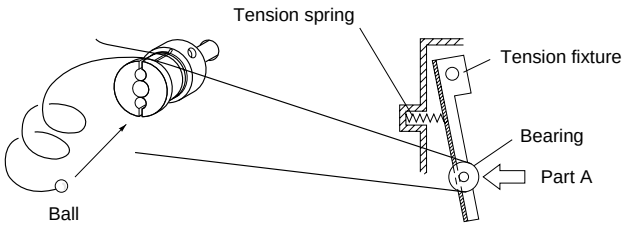


Hold down Part A , wind the wire on the pulley, and insert the wire ball into the pulley hole.

**Step 8**

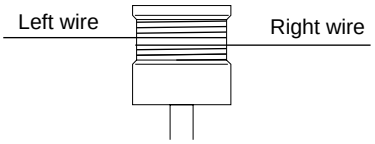


Move the carrier to the both sides.

Check wire for winding.

**Step 9** Reassemble by reversing steps ①, ② and ③.

### 3.8.2 Replacement of PHC rope

① Motor unit

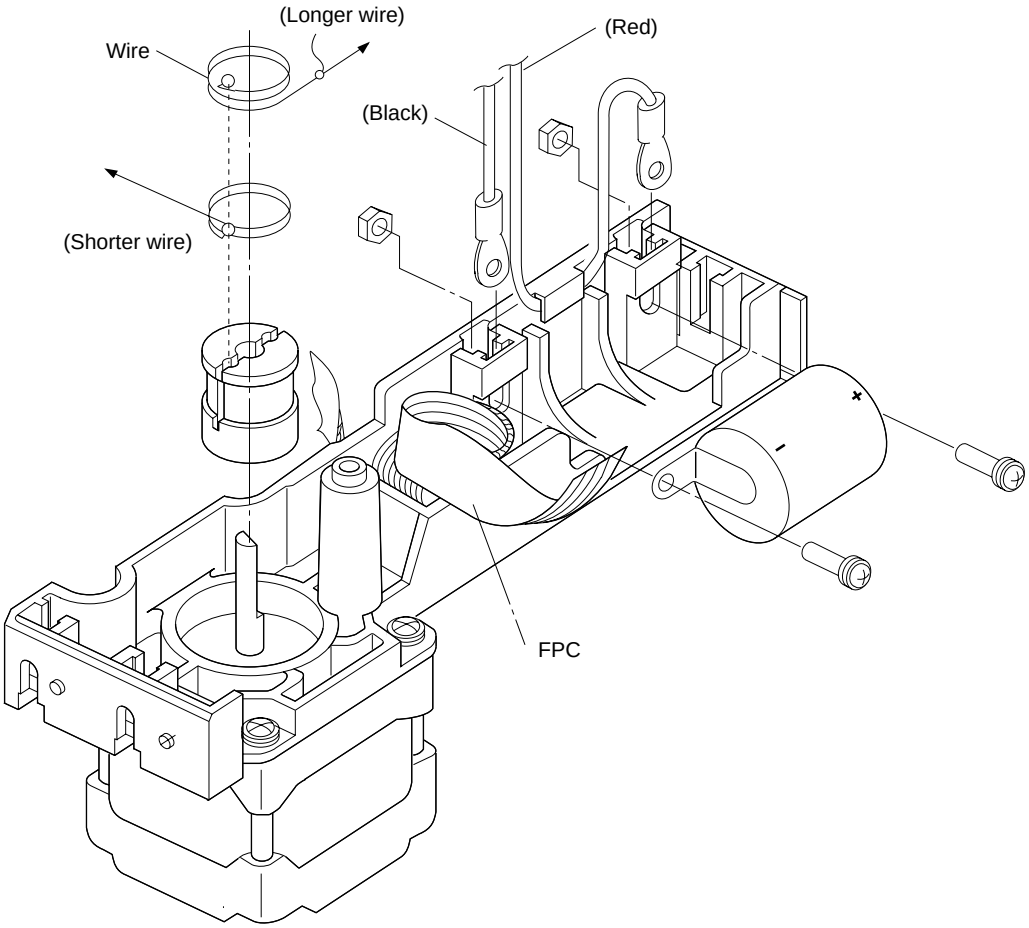


② Carrier unit

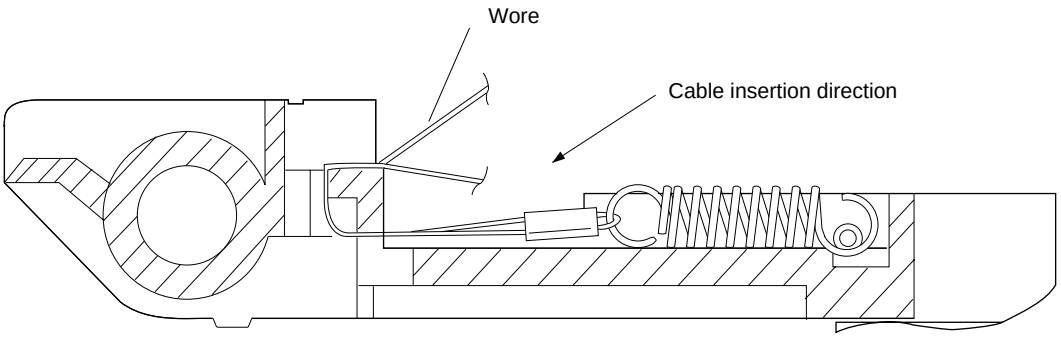

## 3.9 Option unit mounting

### 3.9.1 Alarm/external control unit mounting

(1) PHA

**Step 1** Turn off the power prior to work.

**Step 2**

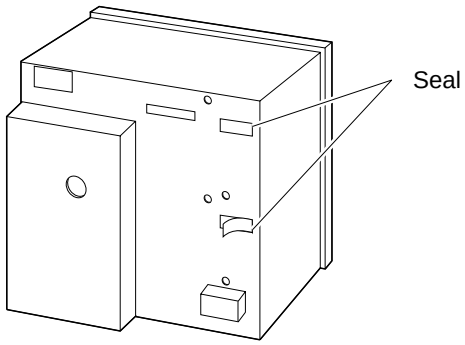


Remove the two blind seals which are attached to the right of the rear of the main unit, so that the two connectors are exposed.

Note: Alarm 1 to 12, external control 1 to 3: 2 seals
Alarm 1 to 6, external control 1 to 3: 1 seal (lower)

**Step 3**

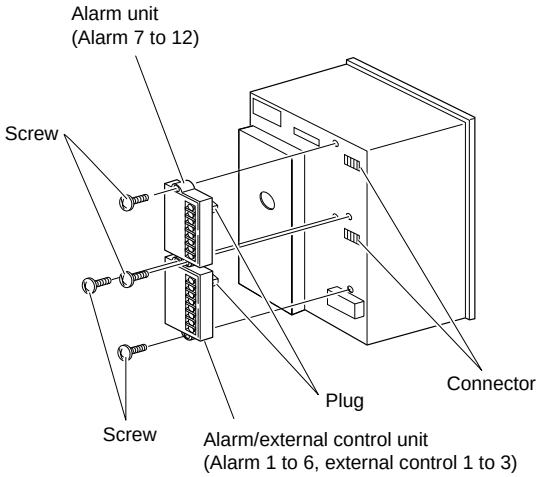


Insert two plugs from the alarm/external control unit and alarm unit into the connectors on the main unit. Fasten them with two lock screws.

Note: Install the alarm/external control unit (alarm 1 to 6, external control 1 to 3) to the lower part and alarm unit plug (alarm 7 to 12) to the upper part.
If they are not properly installed, the external controls will not function.

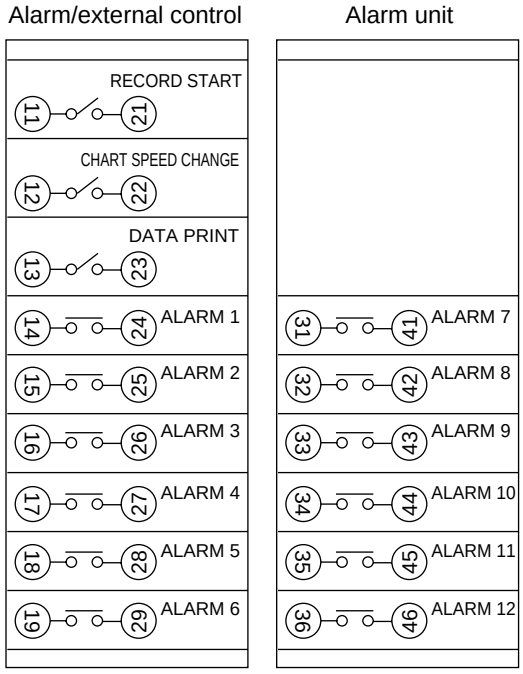

(2) PHC

**Step 1** Turn off the power and proceed as follows.

**Step 2**

| | |
|---|---|
| 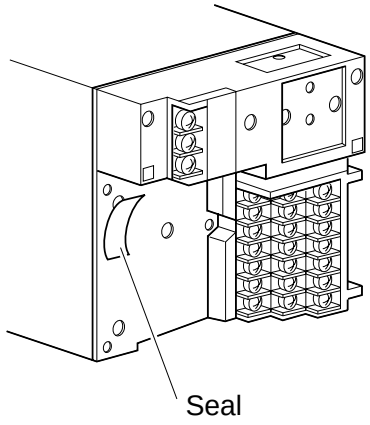 | Tear the blind seal from the main unit's rear panel, so the connector is exposed. |

**Step 3**

| | |
|---|---|
| 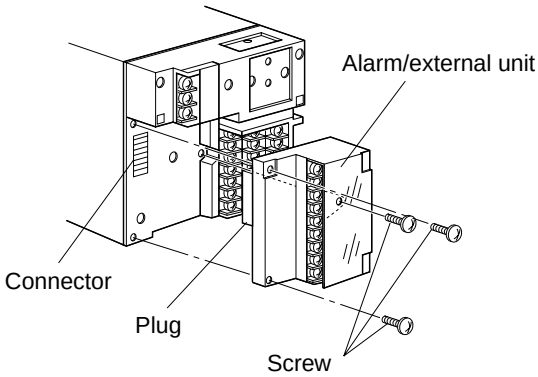 | Insert the alarm/external control unit plug into the connector on the main unit.<br>Fasten them together with three lock screws. |

### 3.9.2 RS485 transmission card mounting

(1) RHA

**Step 1** Turn off the power.

**Step 2**

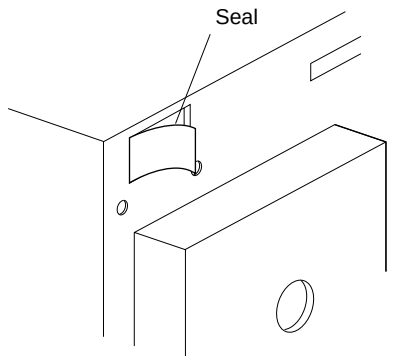


Tear the seal from the rear upper left of the main unit. The transmission terminal mounting hole is blocked by this seal.

**Step 3**

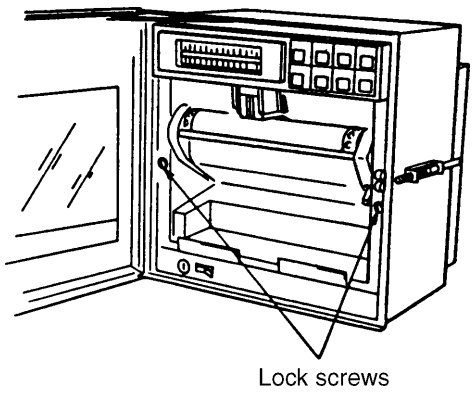


Remove the two lock screws by turning them counterclockwise.

**Step 4**

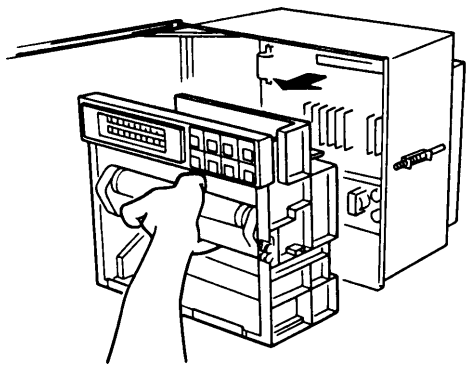

To remove the main unit, hold down the paper feed frame with your hand and pull it forward.

**Step 5**

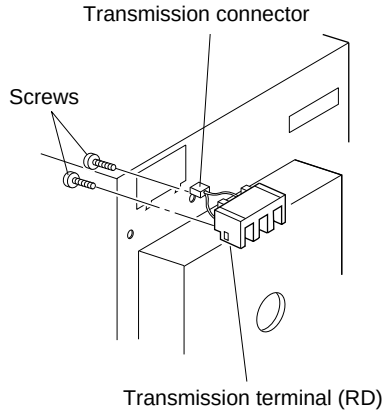


Bring the transmission connector close to the mounting hole at the rear of the main unit. Place the projection at the terminal top into the main unit, and affix it with the attached screws.

**Step 6**

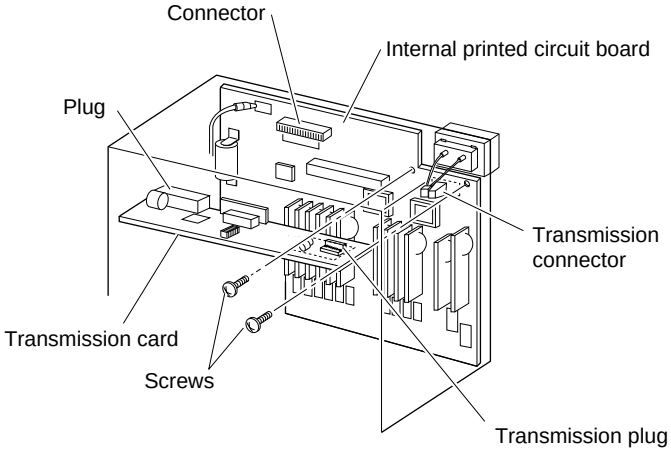


Insert the transmission card plug into the black connector of the internal printed circuit board.
Affix the transmission card with two lock screws. Relay the transmission plug to the transmission connector.

**Step 7** Reverse the procedures described in steps 3 and 4 to return the main unit to the case.

(2) PHC

To add the RS-485 transmission function, observe the mounting procedures of the RS-485 transmission card

**Step 1** Turn off the power.

**Step 2** Open the front door to remove the main unit from the case as shown below.

**Step 3**

| | |
|---|---|
| 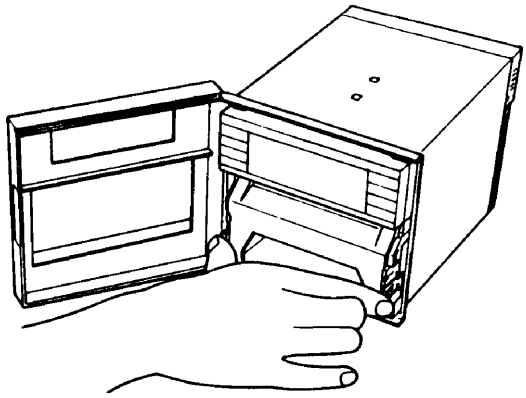 | To withdraw the paper feed unit, hold the left and right paper feed unit drawer levers with your fingers and pull it forward. |

**Step 4**

| | |
|---|---|
| 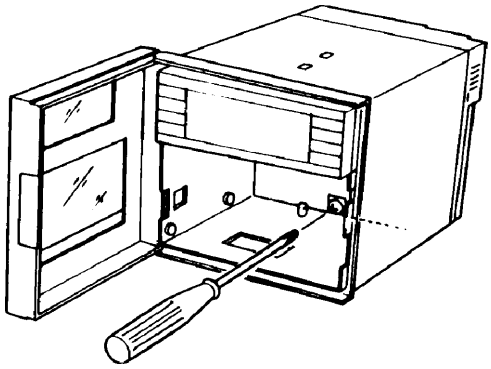 | Loosen the main unit internal lock screws (M4) with a screwdriver. |

**Step 5**

| | |
|---|---|
| 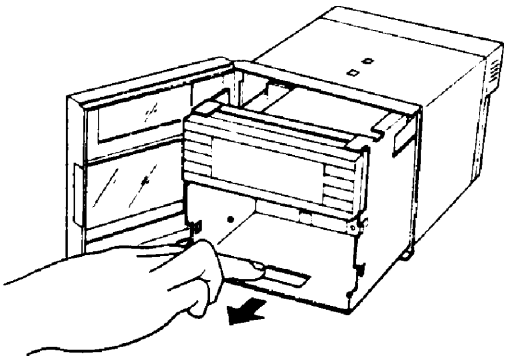 | Place a finger on the rectangle that is on the lower base plate to pull it forward.<br>The main unit can now be separated from the case. |

**Step 6**

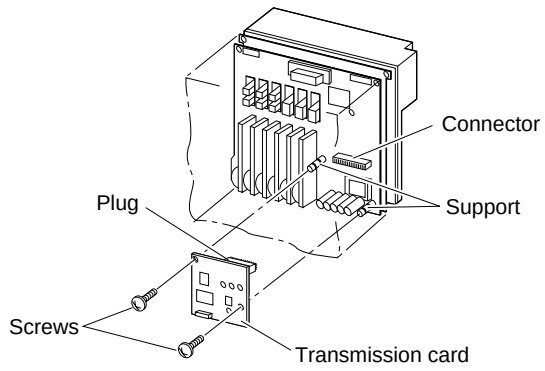


Insert the RS-485 transmission card plug into the connector of the internal printed circuit board. Affix them with two lock screws (M2 x 5).

**Step 7**

- After work has been completed, return the main unit to the case and affix with lock screws.
- Reinstall the paper feed unit.

### 3.9.3 Fluorescent lamp unit mounting

(1) PHA

**Step 1** Turn off the power.

**Step 2**

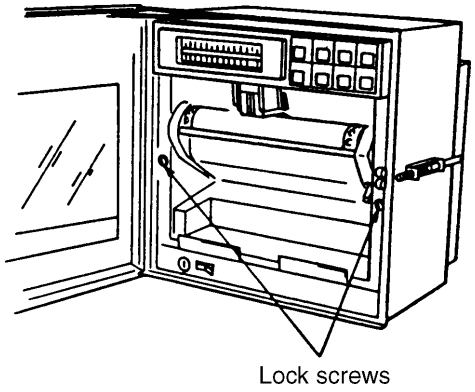


Remove the fluorescent lamp unit by turning the right and left lock screws counterclockwise.

**Step 3**

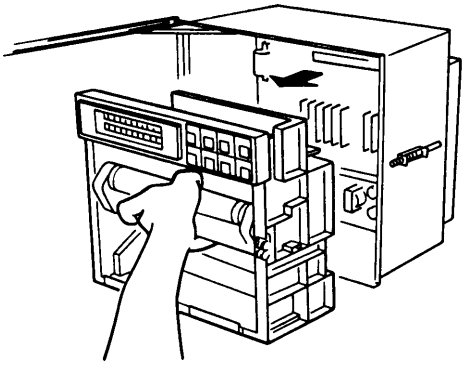

To remove the main unit from the case, hold the paper feed frame and pull it forward.

**Step 4**

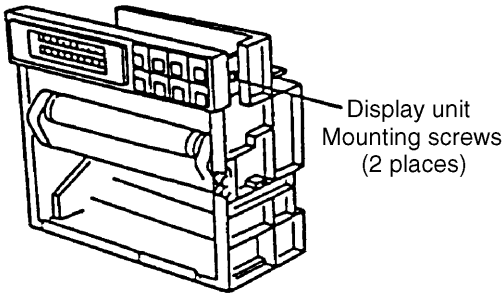


Remove the right and left mounting screws from the display unit. Remove the display unit from the main unit.

**Step 5**

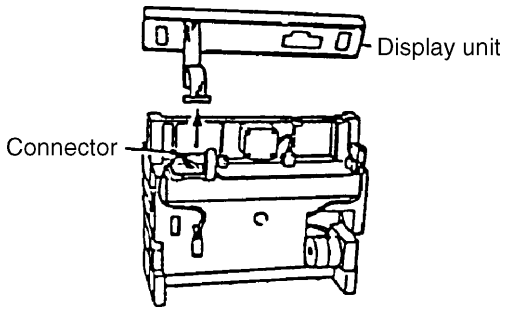


Remove the connector from the display unit and main unit.

**Step 6**

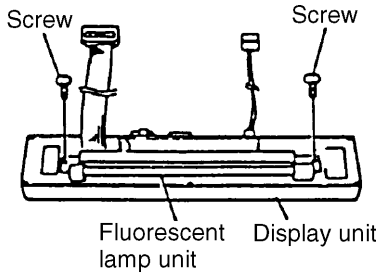


Place the fluorescent lamp unit onto the rear of the display unit and affix with two mounting screws.

**Step 7**

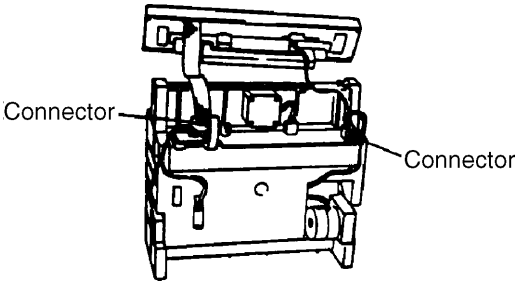


Relay the display unit to the main unit connectors (2).

**Step 8** Reassemble the main unit by reversing the procedures in steps 2, 3 and 4.

(2) PHC

**Step 1** Turn off the power.

**Step 2**

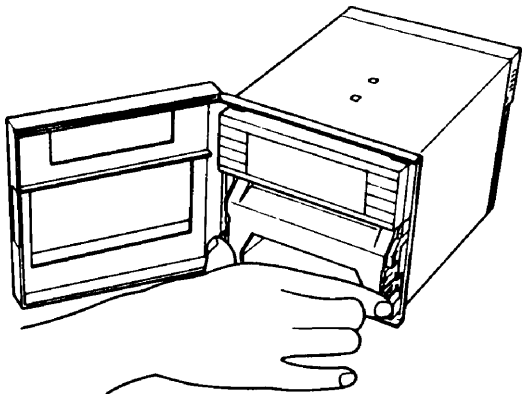

To remove the paper feed unit, hold the right and left paper feed unit drawer levers and proceed to pull it forward.

**Step 3**

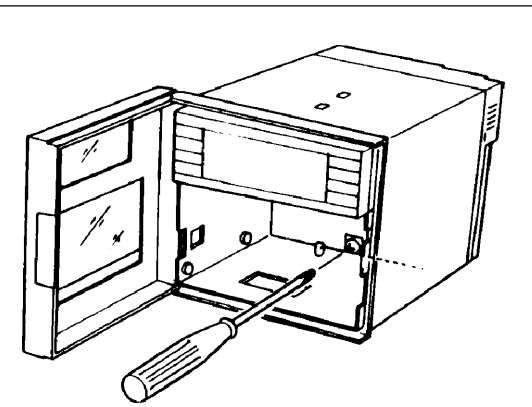

Loosen the main unit internal lock screws (M4) with a driver.

**Step 4**

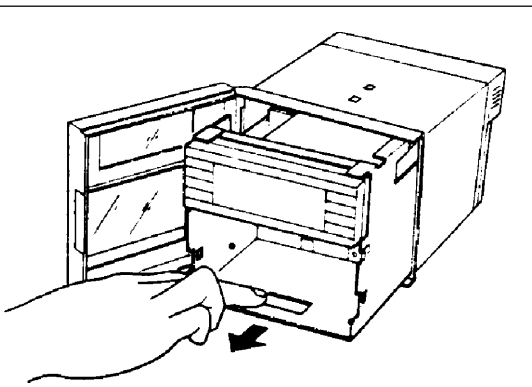

Place your finger on the rectangle on the lower base plate and pull it forward.
The main unit can now be removed from the case.

**Step 5**

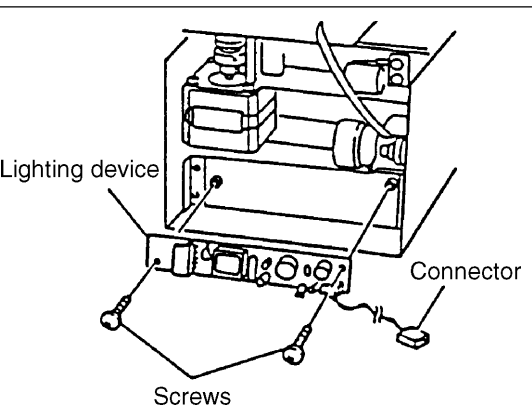


Affix the lighting device unit to the rear of the main unit with two mounting screws.

**Step 6**

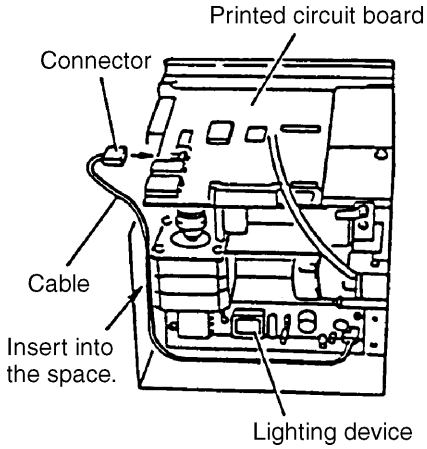


Connect the lighting device unit cable to the left connector on the main unit upper printed circuit board.
Keep the cable in the space provided between the main unit and motor.

**Step 7**

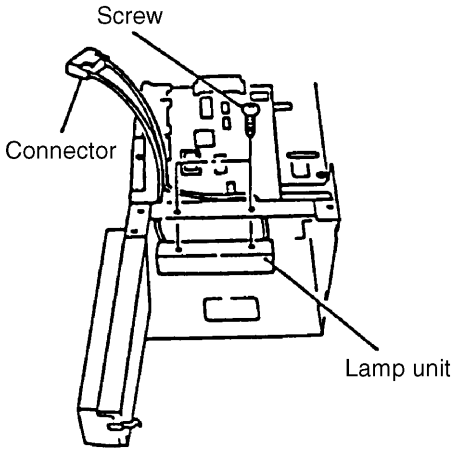


Fix the lamp unit to the front panel of the main unit with two screws.

**Step 8**

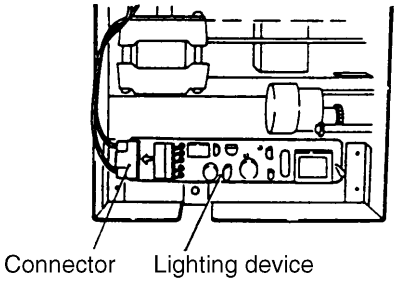


Insert the lamp cable connector into the lighting unit.

**Step 9** Reassemble the main unit by reversing the procedures in steps 2, 3 and 4.

# 4. Method of initial start

If an error occurs in the recorder's internal memory when the battery is removed or when parts are faulty, the recorder cannot be started even if the power is turned on again.
The following steps should be observed to make an initial start:

(1) Hold down the [∧] [∨] keys simultaneously and turn on the power.

(2) The internal memory data is completely initialized by the procedures above.
- Clock resetting is required.
- Head zero-span adjustment or backlash adjustment is required.
- Set again since the input type or range setting values are initialized.

If the displayed characters are wrong, select the Japanese or English mode you, desire as described in II. 6.

# 5. Use of TEST channel

A TEST channel is provided for input calibration and testing at the factory.

## 5.1 Shift to TEST channel

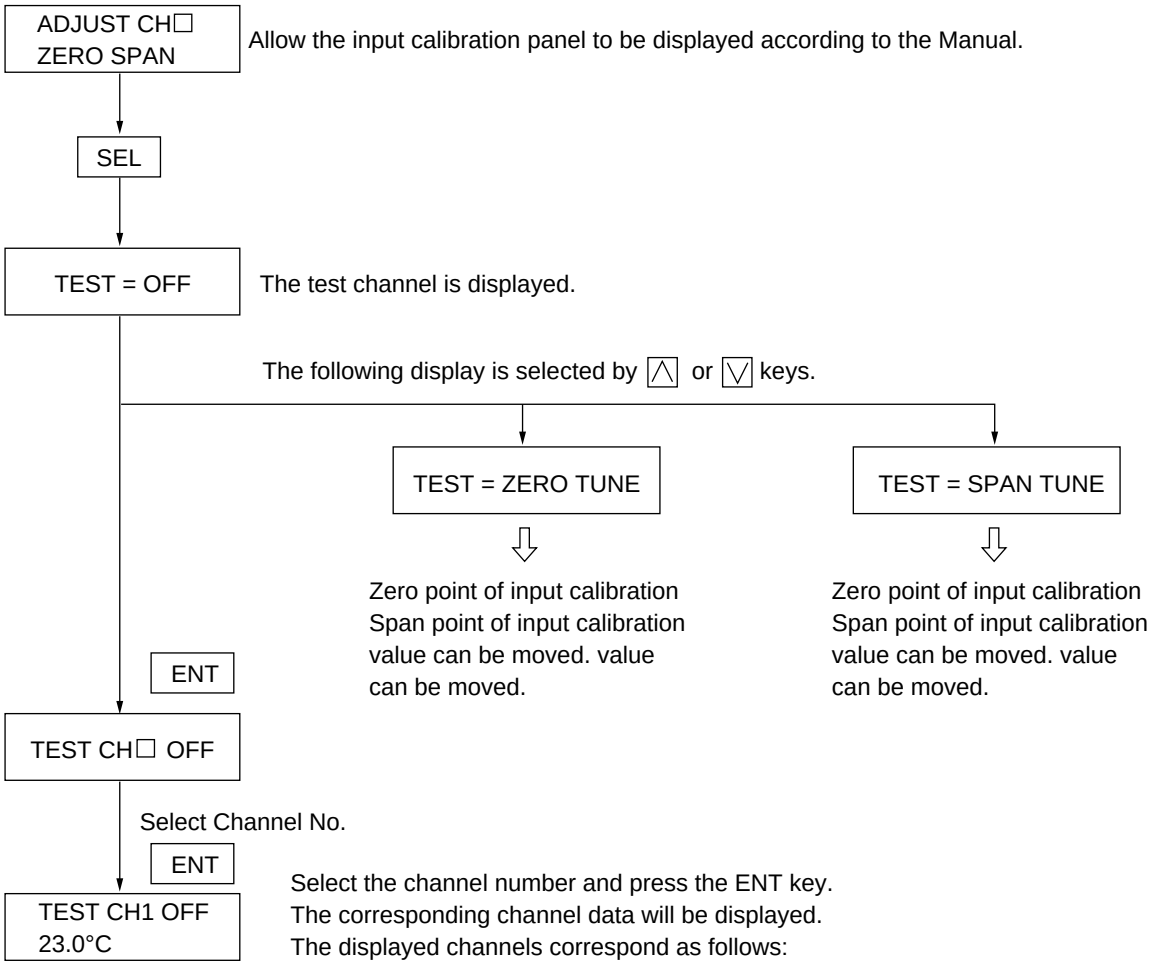


PHA: CHI to CH12: CH1 to CH12 of the measured values
CH13: Cold contact compensation temperature 1 (for CH1 to 3 compensation)
CH14: Cold contact compensation temperature 2 (for CH4 to 6 compensation)
CH15: Cold contact compensation temperature 3 (for CH7 to 9 compensation)
CH16: Cold contact compensation temperature 4 (for C10 to 12 compensation)

PHC: CH1 to CH6: CH1 to CH6 of the measured values
CH7: Cold contact compensation temperature 1 (for CH1 to 3 compensation)
CH8: Cold contact compensation temperature 2 (for CH4 to 6 compensation)

## 5.2 Zero/span fine adjustment of measured value

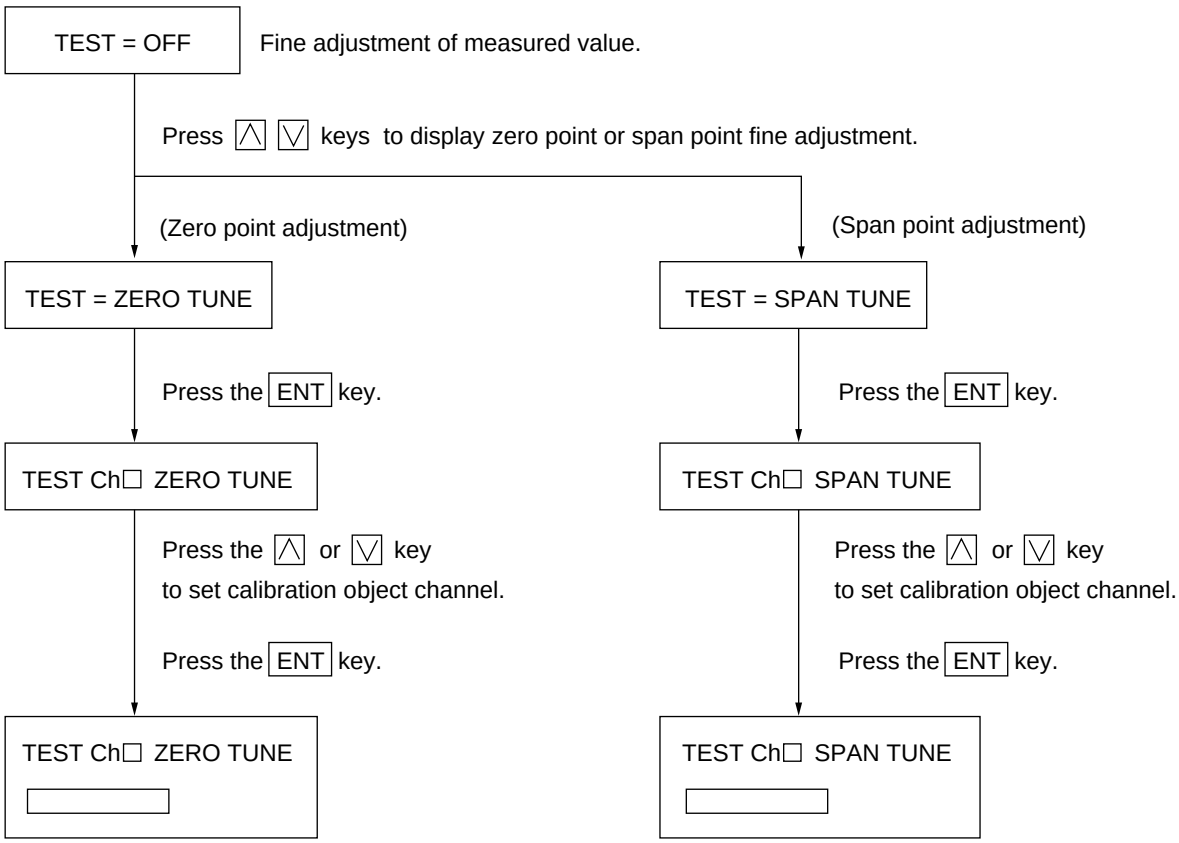


<Zero point fine adjustment>

The current input value corresponding to the input type and unit setting for each channel is displayed. Add the specified span point fine adjustment input. (For input value, see Table on next page.)

Adjust if the displayed values deviate from the specified values.

Press ∧ key to increase the displayed value.

Press the ∨ key to decrease the displayed value.

<Span point fine adjustment>

The current input value corresponding to the input type and unit setting for each channel is displayed. Add the specified span point fine adjustment input. (For input value, see Table on next page.)

Adjust if the displayed values deviate from the specified values.

Press the ∧ key to increase the displayed value.

Press the ∨ key to decrease the displayed value.

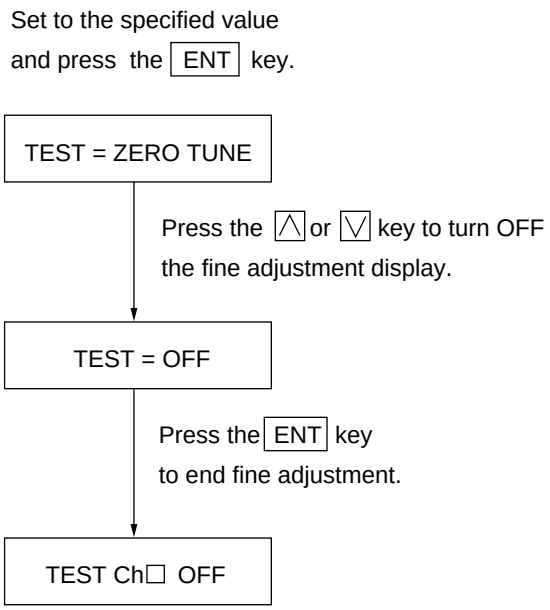


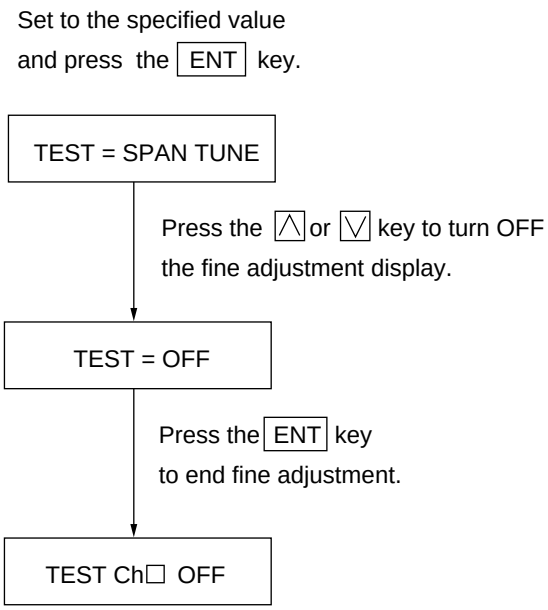


**Input values for zero/span fine adjustment of measured values**

| Type of input | | Zero fine adjustment | | Span fine adjustment | |
|---|---|---|---|---|---|
| | | Input value | Display value | Input value | Display value |
| DC voltage | 50V | 0V | 0.00V | 50V | 50.00V |
| | 5V | 0V | 0.000V | 5V | 5.000V |
| | 500mV | 0mV | 0.0mV | 500mV | 500.0mV |
| | 50mV | 0mV | 0.00mV | 50mV | 50.00mV |
| Thermocouple bulb | Pt | 100Ω | 0.0°C | 313.59Ω | 600.0°C |
| | JPt | 100Ω | 0.0°C | 317.28Ω | 600.0°C |
| Thermocouple | K | 0mV | 0.0°C | 54.807mV | 1370.0°C |
| | The input type is also available for types other than K. Select the span point input value according to the corresponding thermocouple type. | | | | |

The terminal temperature should be measured during cold junction compensation fine adjustment.
Zero point should be compensated for by the measured temperature.

# 6. Internal data setting

## 6.1 Shift to absolute address mode

| |
|---|
| ADJUST CH□<br>ZERO SPAN |

(1) Allow input calibration panel to be displayed according to Manual, Chap. 9.

| |
|---|
| ADJUST CH0<br>ZERO SPAN |

(2) Press the [∨] key to set to CH 0.

| |
|---|
| RAM READ/WRITE<br>ADDR. 0 DATA. 80 |

(3) Press [FEED], [∧] [∨] at the same time to select the absolute address mode, so the write/read process is carried out in or from the internal memory.

(4) After the absolute address action is completed, press the [DISPLAY] key to return to the initial state.

## 6.2 Selection of Japanese/English mode

(1) Select the absolute address mode and set the contents of the address to 8.

| | |
|---|---|
| RAM READ/WRITE<br>ADDR. 8 DATA. 69 | Japanese: 78<br>English: 69 |

(2) Turn off the power once. Hold down the [∨] , [∧] keys simultaneously and turn on the power. (initial start)
Since making an initial start initializes all parameters, resetting is required.

# 7. Selection of PHC power switch

(1) Power supply voltage changeover switch setting
The switch is located beneath the nameplate (shown in part A) of the PHC rear panel. It is set as below:

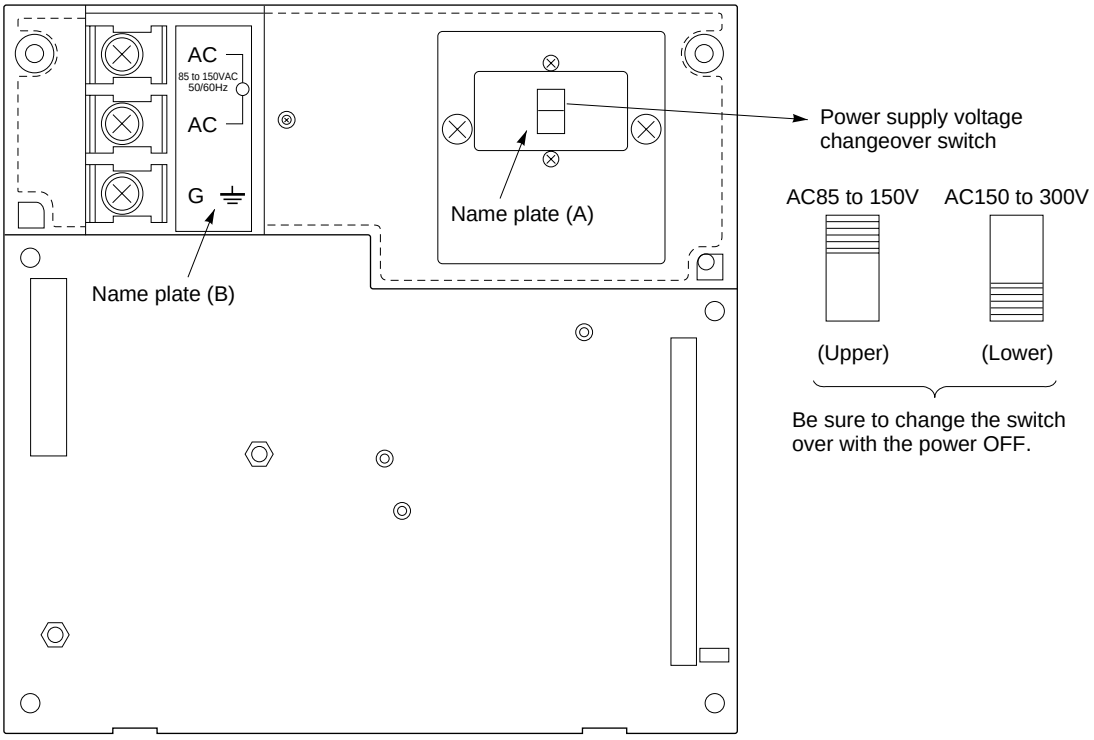


(2) Nameplate attachment
After the power supply voltage has been changed, be sure to change the voltage in the nameplate. (Power in excess of the specified value will destroy the instrument.)

① Specification nameplate .... Nameplates as shown below are attached to the upper and internal parts of the main case. Rewrite the power supply specification.

② Power supply nameplate ... Attach the following nameplates to Part (A) and Part (B) shown above.

| | |
|---|---|
| AC85 to 1500 | TK7E2256P1 |
| AC150 to 3000 | TK7E2256P2 |

} A and B nameplates - 1 set

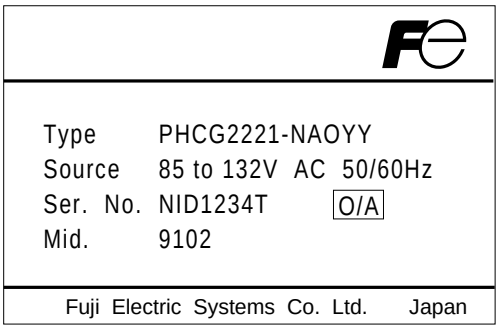

Fuji Electric Systems Co., Ltd.

**Head Office**
Gate City Ohsaki, East Tower, 11-2, Osaki 1-chome,
Shinagawa-ku, Tokyo 141-0032, Japan
http://www.fesys.co.jp/eng

**Instrumentation Div.**
**International Sales Dept.**
No.1, Fuji-machi, Hino-city, Tokyo 191-8502, Japan
Phone: 81-42-585-6201, 6202 Fax: 81-42-585-6187
http://www.fic-net.jp/eng